MP MASTER
MA34039

SYSTRON DONNER

Kruse Electronics

INSTRUCTION MANUAL

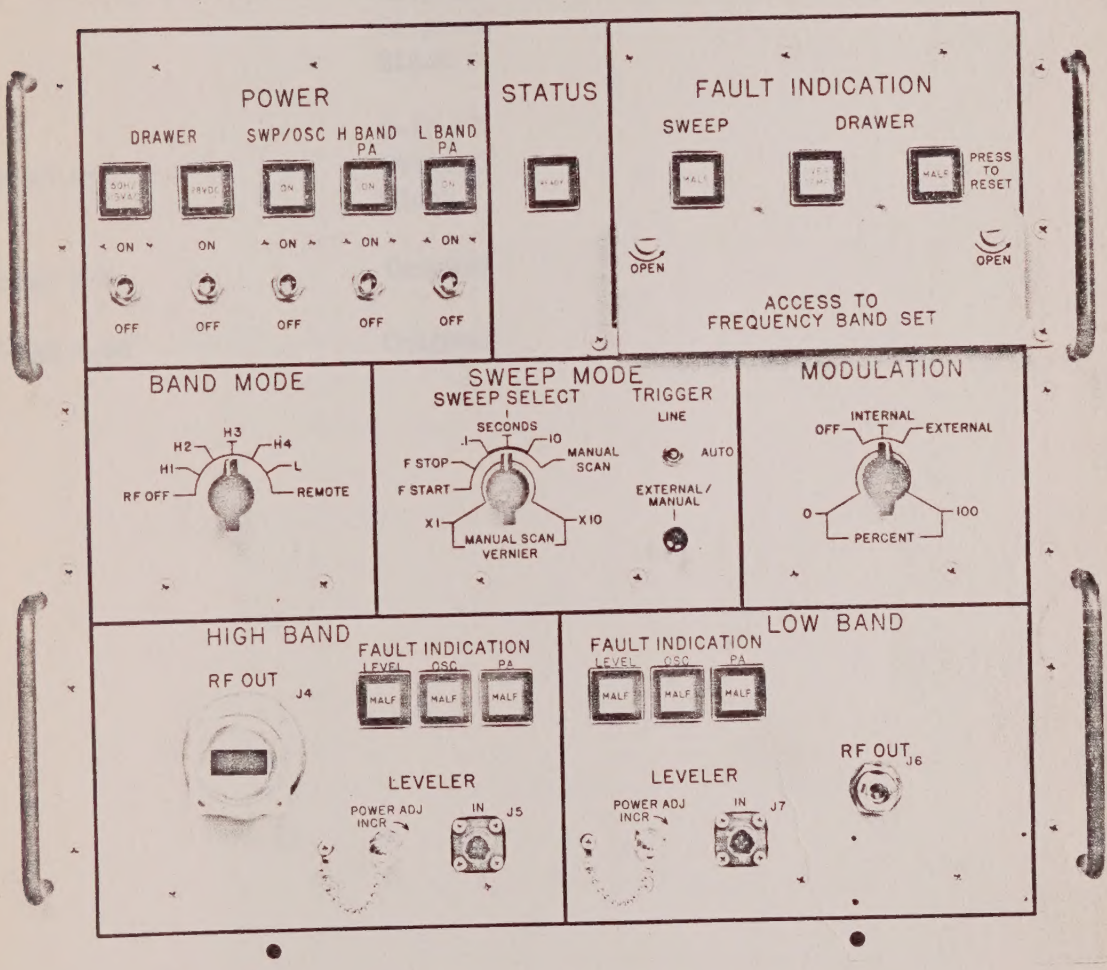

KRUSE ELECTRONICS

MODEL 506

MICROWAVE
SIGNAL SOURCE

© Copyright 1972, Systron-Donner Corporation

KRUSE ELECTRONICS
DIVISION
SYSTRON DONNER
CORPORATION

735 Palomar Avenue, Sunnyvale, California 94086 USA
Telephone (408) 735-9660, TWX 910-339-9309

Digitized by the Internet Archive
in 2025

https://archive.org/details/manualsplus_06009

LIST OF EFFECTIVE PAGES

PAGE	CHANGE
i	9-15-72
ii	Original
iii	Original
iv	Blank
1-1	9-15-72
1-2 through 1-7	Original
1-8	Blank
2-1 through 2-4	Original
3-1 through 3-26	Original

NOTE 1) All Original pages are dated 3-15-72 (March 15, 1972)

NOTE 2) Please report errors and omissions in this manual to Kruse Electronics division of Systron-Donner Corporation, 735 Palomar Avenue, Sunnyvale, California 94086. This report should include the manual title, date of last change, and the exact location (by page, paragraph, line, or figure) of the error. Also include the model number, serial number, and numbers of modifications or options (if any) pertinent to your instrument.

TABLE OF CONTENTS

SECTION/ PARAGRAPH	TITLE	PAGE
SECTION 1	INTRODUCTION AND DESCRIPTION	1-1
1.1	SCOPE OF MANUAL	1-1
1.2	DESCRIPTION	1-1
1.3	APPLICATIONS	1-2
1.4	ACCESSORIES	1-2
1.5	SPECIFICATIONS	1-2
SECTION 2	INITIAL INSTRUCTIONS	2-1
2.1	UNPACKING AND INSPECTION	2-1
2.1.1	Removing Contents	2-1
2.1.2	Inspection	2-1
2.2	PREPARATION FOR USE	2-1
2.3	MOUNTING	2-3
2.4	PACKING FOR SHIPMENT	2-3
SECTION 3	OPERATION	3-1
3.1	GENERAL	3-1
3.2	CONTROLS, INDICATORS, AND CONNECTORS	3-1
3.3	OPERATING INSTRUCTIONS	3-15
3.3.1	First Time Operating and Checkout Procedure	3-15
3.3.2	Operating Procedures	3-23

LIST OF FIGURES

FIGURE	TITLE	PAGE
2.1	Model 506 and Model 507 Dimensions	2-4
3.1	Front Panel Controls, Indicators, and Connectors	3-2
3.2	Rear Panel Connectors	3-11

LIST OF TABLES

TABLE	TITLE	PAGE
3.1	Front Panel Controls, Indicators, and Connectors	3-1
3.2	Rear Panel Connectors	3-10
3.3	Recommended Test Equipment	3-15

SECTION I

INTRODUCTION AND DESCRIPTION

1.1 SCOPE OF MANUAL

This manual provides application information and operating instructions for the Kruse Model 506 Microwave Signal Source. Theory of operation, maintanance instructions, schematic diagrams, and parts lists are in the companion Maintenance manual for the Kruse 506.

1.2 DESCRIPTION

The 506 Microwave Signal Source delivers a minimum of 1 watt of single-frequency or swept RF over four frequency ranges in the high band (JCS I and J bands) and over a single frequency range in the low band (JCS C and D bands). A similar instrument, Model 507, covers three frequency ranges in one microwave band. The Model 507 is described fully in its own Operation and companion Maintenance manuals.

Included with each Model 506 is a pair of directional detectors (leveling detectors) which mount externally; these detectors are used in the leveling feedback loop, to control the output power at the load, and keep power variations with frequency at a minimum. One directional detector is used for each band or output; the directional detectors may be interchanged between different 506 Sources with ease.

The exact frequency bands and test frequencies within a particular band are listed in this section in Paragraph 1.5, Specifications, and in the Kruse Acceptance Test Procedure.

The 506 Source features remote-control capability, built-in-test (BIT) indicators for normal and malfunction mode operation, and front-panel adjustment of all modes including power, band and frequency range.

The 506 is modularly constructed for ease of maintenance; maximum time should never exceed an hour from the observation of a malfunction through fault location, removal/replacement of a given module, and restoration to full function.

With the exception of a traveling wave tube (TWT) in the high band RF amplifier, the Signal Source is constructed almost entirely of silicon semiconductors, precision wirewound and metal film resistors, and plug-in glass epoxy circuit boards. This construction assures long-term reliability of the instrument with long periods of maintenance-free service.

1.3 APPLICATIONS

The Kruse Model 506 is the unit of choice where a remote controlled, militarized medium-power signal source with minimal down-time and built-in-test devices is required.

Generally, sweepers and RF test sources operate in the 1 to 100 milliwatt range, and this is appropriate for most uses. In some cases, however, a medium power source is required. Antenna test ranges, for example, or countermeasures equipment tests need equipment with enough power output to simulate ground or airborne radars at scale distances.

With its five preset sweep ranges in two bands, the 506 is also ideal for production tests or other repetitive tests. In this case, the operator merely changes the Band Mode switch from "RF Off" to "H1", or "H4", or "L", or any of the other ranges with equal ease. Once the sweep limits have been set, any given frequency range may be selected repeatedly without use of a frequency counter or frequency meter.

The 506 does not have a dial scale or other indication or frequency or sweep range; classified tests which might otherwise have to be performed in a closed area or by cleared operators might be performed in the open when a 506 is used.

If desired, the access door to the frequency adjustments can be sealed with a tamper-proof device preventing any unauthorized frequency changes.

1.4 ACCESSORIES

Each 506 is supplied with one Model 1056-1 (high band), one Model 1051-1 (low band) directional detector (leveling detector), and one 950479 P. C. Board extender. Not included are RF cables, leveling cables, or mating power, DC, and remote control cables. These items are available on special order, however. Test Fixture 9029 allows bench testing or remote control of the 506.

1.5 SPECIFICATIONS

FREQUENCY

Frequency Range

High Band	4 frequency ranges within X band (JCS bands I and J). Ranges to be specified by user, adjustable with front-panel controls.
Low Band	1 frequency range within L Band (JCS bands C and D). Range to be specified by user, adjustable with front panel controls.

Frequency Stability

Short-term drift	< ± .02%/° C
Long-term drift at constant ambient temperature. (Based upon end-frequency points of sweep)	< ± 0.1% 30 days < ± 0.5% 90 days
Frequency shift with 10% line voltage change	< ± .001%

MAIN OUTPUTS

High Band

Connector	WR-90 (UG-39/U) waveguide choke flange
Maximum unleveled RF output amplitude	+35 dBm (3.15W) worst case
Leveled RF output amplitude	+30 dBm (1.0W), set by front-panel control
Flatness with load VSWR ≤1.25:1	< ± 0.2 dB over any frequency range
Level drift, constant temperature	< ± 0.1 dB in 180 days
Level drift, short term	< ± .05 dB/ ° C
Mismatch protection	Mismatches of any magnitude, including open circuits and short circuits, will not cause damage to the equipment.
Harmonics	> 20 dB below level of fundamental
In-band spurious content	> 40 dB below carrier (>1 MHz away)
Residual AM	>40 dB below level of carrier
Residual FM (1 Hz to 30 kHz BW)	< 300 kHz peak

Low Band

Connector	Precision Type "N"
Maximum unleveled RF output amplitude	+35 dBm (3.15W) worst case
Leveled RF output amplitude	+30 dBm (1.0W) set by front-panel control
Flatness with load VSWR ≤1.25:1	< ± 0.2 dB over any frequency range

Level drift, constant temperature	<± 0.1 dB in 180 days
Level drift, short term	< ± .05 dB/ °C
Output Impedance	50 Ω
Mismatch Protection	Mismatches of any magnitude, including open circuits and short circuits, will not cause damage to the equipment.
Harmonics	> 20 dB below level of fundamental
In-band spurious content	> 40 dB below carrier (>1 MHz away)
Residual AM	> 40 dB below level of
Residual FM (1 Hz to 30 kHz BW)	< 30 kHz peak

AUXILIARY OUTPUTS

High Band

Connector	Precision Type "N"
RF Output amplitude	> + 13 dBm (20 mW) across the band
Output Impedance	50 Ω
Mismatch Protection	Mismatches of any magnitude, including open circuits and short circuits, will not cause damage to the equipment.

Low Band

Connector	Precision Type "N"
RF Output Amplitude	> + 13 dBm (20 mW) across the band
Output Impedance	50 Ω
Mismatch Protection	Mismatches of any magnitude, including open circuits and short circuits, will not cause damage to the equipment.

MODULATION

Modes Available	CW, AM Internal, AM External

AM Internal Specifications

Modulation depth	0 - 100%, front-panel adjustable
Frequency	1 kHz ± 1 Hz

Stability	< ±1 Hz/°C
Signal	Square Wave
Risetime	< 10 μ S
Fall Time	< 10 μ S
Asymmetry	< 5% @ 100% Modulation

AM External Specifications

Signal	Square Wave
Frequency	DC to 10 kHz (-3 dB; -6 dB/octave above 10 kHz)
Polarity	Negative-going or ac-coupled
Amplitude	5 V p-p for 100% modulation capability
Input Impedance	≈ 8 kΩ
External Power Control	100 mV/mW

SWEEP

Modes Available	Sweep frequency start, sweep frequency stop (discrete frequencies), Electronically-swept from F start to F Stop, Manually-swept with front-panel control, or CW (Discrete Frequency set by manual scan control).
Sweep Ranges	0.1, 1 and 10S; variable with front-panel vernier control over 1 -10 range.
Flyback (Retrace) Time	10% of selected decade

Sweep Output

Signal	Ramp
Polarity	Positive
Low end of sweep	0 V ± 40 mV
High end of sweep	+ 10 V ± 40 mV

Sweep Trigger Modes	Automatic, Line, Manual, or External
Automatic	Sweep started automatically at end of previous sweep
Line	Start of sweep synchronized with AC line rate
Manual	Sweep starts when front panel push-button is pressed
External	
Signal	Pulse
Amplitude	≥ 2 V
Polarity	Positive
Width	≥ 1μS
Input Impedance	≈10 kΩ

POWER REQUIREMENTS

AC	
Voltage	115 VAC ± 10%
Frequency	50 - 70 Hz
Phase	1 ϕ
Power	250 VA max
DC	
Voltage	28 VDC ± 10%
Current	1.5A max

PHYSICAL

Type	Full rack mounting
Dimensions	
Front panel	15.71 H x 19.00 W
Chassis	14.12 H x 16.81 W x 20.00 D
Weight	≤ 95 lbs.

ENVIRONMENT

Temperature	Per MIL-T-21200, Class 3 within these limits:
Storage	-62 ° C to +85 ° C
Operating	0° C to +71 ° C
Humidity	Per MIL-T-21200;Additionally:
Non-operating	85% RH at + 28 ° C to 95% RH at +71° C
Operating	To 95% RH
Altitude	Per MIL-T-21200
Non-operating	To 50,000 feet
Operating	To 10,000 feet
Vibration	Per MIL-STD-810, Method 514, Procedure X:
5 to 15 Hz	0.7 in. D.A.
15 to 25 Hz	0.25 in. D.A.
25 to 55 Hz	0.04 in. D.A.
Shock	Per MIL-T-21200; 25 g, 11 mS pulse
Salt Atmosphere	Per MIL-T-21200
Explosive Atmosphere	Per MIL-T-21200; 13:1 air/vapor (by weight) at 10,000 feet
EMI	Per MIL-STD-461, Notice 2, requirements CE03, CE06, CS02, CS03, CS04, CS05, CS06, RE02 and RE03. Limits for conducted and radiated interference are decreased 20 dB.

SECTION 2

INITIAL INSTRUCTIONS

2.1 UNPACKING AND INSPECTION

The instrument is shipped in a specially constructed shipping crate to provide maximum protection during transit. Use care when unpacking to prevent damage to front panel and cabinet finish, controls, indicators, connectors, etc. The directional detector is shipped separately.

2.1.1 Removing Contents. To remove the unit from the shipping crate, carefully remove the top of the crate and remove the top protective cushion. With an assistant to help, lift the unit clear from the shipping crate; remove the remaining protective cushions and the dust protection bag to free the unit.

2.1.2 Inspection. The unit was carefully tested and inspected prior to shipment, and was designed from the start for operation in severe environments. Nevertheless, it is possible that shipping damage could have occured. Carefully inspect the unit for shipping damage and completeness. If the instrument is damaged in any way, or does not pass incoming inspection (Familiarization and Checkout Procedure, Paragraph 3.3.1), see the warranty and repair notice at the front of this manual.

2.2 PREPARATION FOR USE

The unit is not ready to use as received. Unless they were specially ordered, mating connectors and cables are not supplied. Table 2.1 lists the chassis connectors, mating connectors, and pin assignments of all connectors other than RF connectors.

Table 2.1 Connectors and Pin Assignments

CONNECTOR	TYPE	MATING CONNECTOR	PIN	FUNCTION
J1 POWER INPUT	MS3124E20-16P	MS3126E20-16S	B	115 VAC (Hot)
			N	115 VAC (Neutral)
			M	Shield
			G	Chassis ground
J2 DC SIGNAL	MS3124E20-16PW	MS3126E20-16W	S	+ 28 VDC
			M	28 VDC return
			N	Shield
			G	Chassis ground

CONNECTOR	TYPE	MATING CONNECTOR	PIN	FUNCTION
J3 REMOTE	Bendix 21-203724-200 (EMI filtered version of MS3124E24-61P)	MS3126E24-61S	B	Remote Reset
			A	Remote On
			C	Remote Failure Indicator
			G	Remote RF On
			D	Remote Band H1
			E	Remote Band H2
			F	Remote Band H3
			H	Remote Band H4
			J	Remote Band L

NOTE

All J3 functions are either activated by or supply a 28 VDC Return command. That is, pin G must be connected to 28 VDC Return to remotely turn RF on, and pin C is internally connected to 28 VDC Return when a failure occurs internally.

J5 LEVELER IN	MS3112E-8-4P	MS3116E-8-4S	A	Leveler (Signal)
			B	Leveler (Return)
			C	Shield
J7 LEVELER IN	MS3112E-8-4PW	MS3116E-8-4SW	A	Leveler (Signal)
			B	Leveler (Return)
			C	Shield

When the power cable to connect to J1 POWER INPUT is prepared, a 3-wire power cable must be used; preferrably, this cable will be shielded. Connect the black wire of the power cable to pin B(Hot), the white wire to pin N (Neutral), and the green wire to pin G (Chassis ground). If a shield is used, connect it to pin M. The signal source must be connected to a grounded power supply to protect operating personnel. To preserve this protective feature when operating from a two-contact outlet, use a two-to-three wire adapter with the ground wire connected to a convenient ground point.

2.3 MOUNTING

The unit is designed to be mounted in a standard 19 inch rack; it occupies 15.7 inches of rack space and is 20 inches deep. Refer to Figure 2.1 for complete dimensions.

The unit must be supported in the rear as well as by the front panel. For ease of maintenance, drawer slides should be used. Provision can be made for any drawer slide specified by the user; if none is specified, the threaded inserts shown in Figure 2.1 will be supplied. These match the 83508-038278-1 (left side) and -2 (right side) drawer slides manufactured by Grant Pulley and Hardware Corporation of West Nyack, New York.

CAUTION

A MINIMUM OF TWO PERSONS IS REQUIRED
TO SAFELY INSTALL THE UNIT.

2.4 PACKING FOR SHIPMENT

If the unit is to be packed for shipment, use the original shipping container and packaging. If the original material has been discarded, or is not in condition for re-use, the unit may be shipped in a commercially-available 1100 pound test container that meets the requirements of Federal Standard PPP-B-640D. The inside of the container should be padded with 2-inch foam.

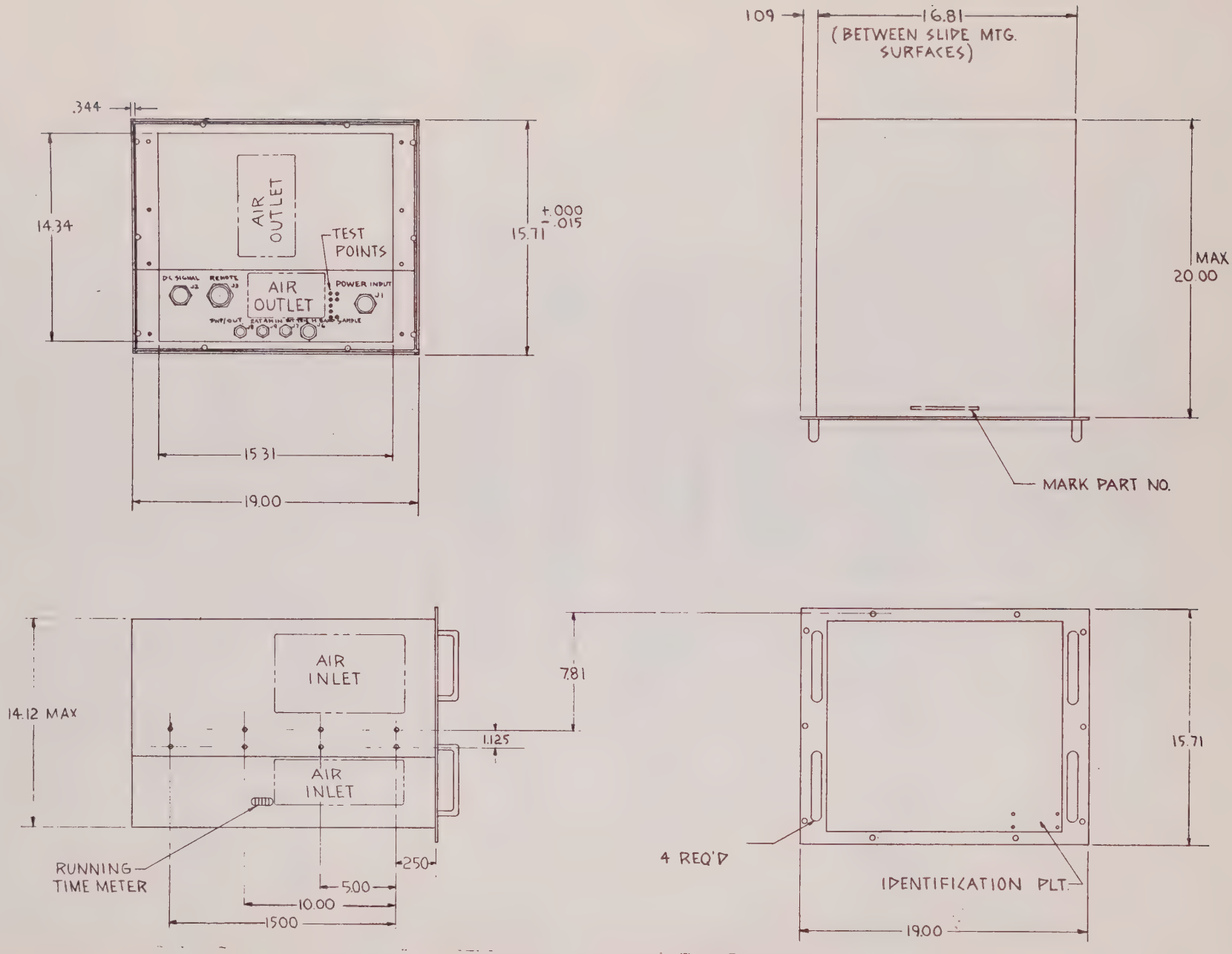

Figure 2.1 Model 506 and Model 507 Dimensions

SECTION 3

OPERATION

3.1 GENERAL

This section contains instructions for the operation and applications of a Model 506 Microwave Signal Source; the functions and uses of the controls and indicators are described as are typical applications. This section also contains a checkout procedure which should be used upon receipt to determine that the unit is functioning properly.

CAUTION

TO AVOID POSSIBLE PERSONAL INJURY OR DAMAGE TO THE INSTRUMENT, DO NOT ATTEMPT TO OPERATE IT UNTIL YOU HAVE READ AND UNDERSTOOD THIS SECTION.

3.2 CONTROLS, INDICATORS, AND CONNECTORS

The various controls, indicators, and connectors on the front and rear panels are shown in Figures 3.1 and 3.2, and described in Tables 3.1 and 3.2

Table 3.1 Front Panel Controls, Indicators and Connectors

FIGURE 3.1 INDEX	ITEM	FUNCTION
1	BAND MODE Switch	Black bar knob/7-position switch. Selects operating frequencies and modes:
	RF OFF Position	Disables high and low band power amplifiers and sets both oscillator PIN modulators to maximum attenuation.
	H1 Position	Enables high band power amplifier and sets high band oscillator PIN modulator for normal operation. Frequency control in this position is determined by H1 START and H1 STOP controls (items 16 and 17).

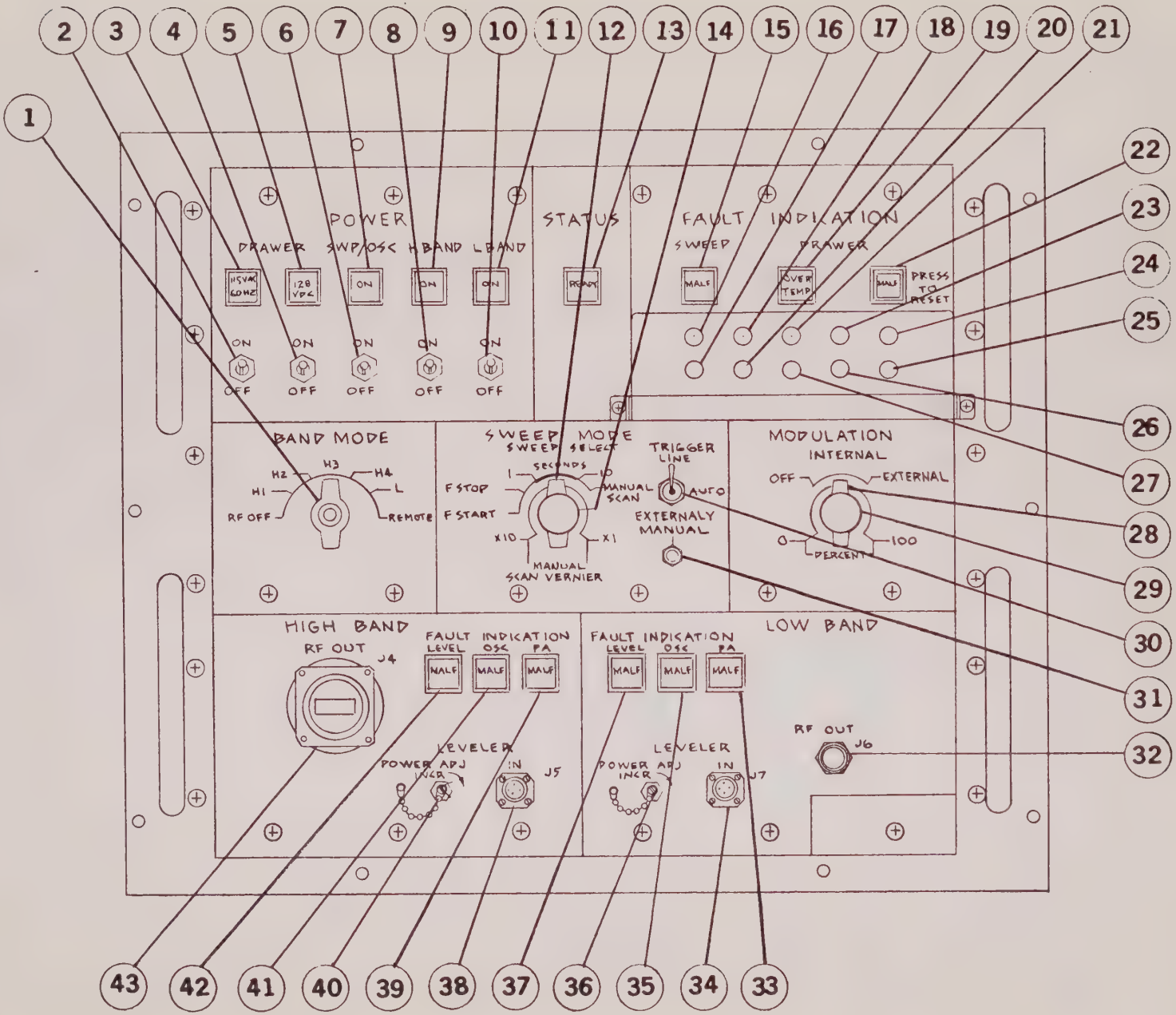

Figure 3.1 Front Panel Controls, Indicators, and Connectors

FIGURE 3.1 INDEX	ITEM	FUNCTION
		(Pins A and G of connector J3 REMOTE must be connected to the 28 V Return to allow the unit to function in this way. A is "Remote ON" and G is "Remote RF On.")
	H2 - H4 Positions	Similar to H1 position with appropriate changes in frequency controls.
	L Position	Enables low band power amplifier and sets low band oscillator PIN modulator.
	REMOTE Position	Setting the BAND MODE switch to this position transfers frequency control to connector J3 REMOTE. During testing, the Model 9029 Test Fixture functions as the remote control. Remote functions are determined by the J3 pin connected to the 28 V Return: Pin D — Selects H1 Pin E — Selects H2 Pin F — Selects H3 Pin H — Selects H4 Pin J — Selects L

FIGURE 3.1 INDEX	ITEM	FUNCTION
2	DRAWER 115 VAC 60 HZ Circuit Breaker Switch	Toggle switch/breaker. When set to ON, (and Drawer 28 VDC switch is set to ON) applies 115 VAC power to unit (assuming pin A of J3 REMOTE has been remotely connected to the 28 V Return). When the circuit breaker trips, the toggle handle will rest between OFF and ON. To reset it, move the handle to OFF, then back to ON.
3	DRAWER 115 VAC 60 HZ Indicator	White indicator. Lights to indicate that 115 VAC power has been applied to the unit.
4	DRAWER 28 VDC Circuit Breaker Switch	Toggle switch/breaker. When set to ON, applies 28 VDC power to unit. Unit will not function without 28 V power. Breaker resets as in item 2.
5	DRAWER 28 VDC Indicator	White indicator. Lights to indicate that 28 VDC power has been applied to the unit.
6	SWP/OSC ON Circuit Breaker Switch	Toggle switch/breaker. When set to ON, applies operating power to sweep circuits and to the high and low band oscillators. Breaker resets as in item 2.
7	SWP/OSC ON Indicator	White indicator. Lights to indicate that power has been applied to the sweep circuits and to the high and low band oscillators.
8	H BAND PA ON Circuit Breaker Switch	Toggle switch/breaker. When set to ON, applies operating power to high band power amplifier (the amplifier is enabled separately, however). Breaker resets as in item 2.

FUNCTION 3.1 INDEX	ITEM	FUNCTION
9	H BAND PA ON Indicator	White indicator. Lights to indicate that power has been applied to the high band power amplifier.
10	L BAND PA ON Circuit Breaker Switch	Toggle switch/breaker. When set to ON, applies operating power to low band power amplifier (the amplifier is enabled separately, however). Breaker resets as in item 2.
11	L BAND PA ON Indicator	White indicator. Lights to indicate that power has been applied to the low band power amplifier.
12	SWEEP SELECT Switch	Black bar knob/6-position switch. Selects sweep rates and modes:
	F START Position	Unit operates in CW mode, generating only the discrete sweep start frequency (modulated or unmodulated) as determined by the setting of the appropriate frequency band START control.
	F STOP Position	Unit operates in CW mode, generating only the discrete sweep stop frequency (modulated or unmodulated) as determined by the setting of the appropriate frequency band STOP control.
	.1 SECONDS Position	Unit operates in a sweeping mode; the total time between the beginning of one sweep from F Start to F Stop to the beginning of the next sweep is 100 mS. This action can be modified by the MANUAL SCAN/VERNIER control and by the SWEEP MODE TRIGGER switch; refer to items 14 and 30.

FIGURE 3.1 INDEX	ITEM	FUNCTION
	1 SECOND Position	Unit operates in a sweeping mode; the total sweep time is 1 s, except as modified by the MANUAL SCAN/ VERNIER control or SWEEP MODE TRIGGER switch.
	10 SECONDS Position	Total sweep time is 10 s, except as modified.
	MANUAL SCAN Position	In this position the MANUAL SCAN/ VERNIER control sets the operating frequency of the unit to any desired point between F Start (X10) and F Stop (X1), as determined by the appropriate frequency band START and STOP controls.
13	STATUS READY Indicator	Green indicator. Lights to indicate that the unit is functioning properly, and is ready to generate an RF signal when the local or remote band mode switch enables it.
14	MANUAL SCAN/VERNIER Control	Black knob/potentiometer. When the SWEEP SELECT switch is set to the .1, 1 or 10 S positions, this control acts as a variable multiplier adjustment; at X1, it acts as a unity multiplier, and the sweep time is read directly from the switch position setting. The multiplier increases with CCW rotation so that at X10 the sweep time is multiplied by a factor of 10.
15	SWEEP MALF Indicator	Red indicator. Lights to indicate that the sweep circuits are not generating appropriate signals.

FIGURE 3.1 INDEX	ITEM	FUNCTION
16	H1 START Control	Screwdriver-adjust potentiometer (behind access cover). Determines F start frequency for the H1 position of the BAND MODE switch.
17	H1 STOP Control	Screwdriver-adjust potentiometer. Determines F stop for BAND MODE switch position H1.
18 and 20	H2 START Control H2 STOP Control	Screwdriver-adjust potentiometers. Determine F start and F stop for H2 positions of BAND MODE switch.
21 and 27	H3 START Control H3 STOP Control	Screwdriver-adjust potentiometers. Determine F start and F stop for H3 position of BAND MODE switch.
23 and 26	H4 START Control H4 STOP Control	Screwdriver-adjust potentiometers. Determine F start and F stop for H4 position of BAND MODE switch.
19	DRAWER OVER TEMP Indicator	Red indicator. Lights to indicate that internal temperature sensor switch has been activated by excessive heat. Can be reset by pressing the DRAWER MALF PRESS TO RESET switchbutton (only after indicator has gone out).
22	DRAWER MALF PRESS TO RESET Switch and Indicator	Red Indicator and pushbutton switch. Lights to indicate failure in the unit; generally, the indicator lights in coincidence with a localized malfunction indicator so that the malfunction can be isolated to a particular module. When this indicator is lighted, pin C of connector J3 REMOTE is also connected to the 28 V Return. Pressing the switchbutton resets the malfunction circuits; if the condition causing the malfunction circuits to trigger has been removed, the indicator will remain unlighted.

FIGURE 3.1 INDEX	ITEM	FUNCTION
24 and 25	L START Control L STOP Control	Screwdriver-adjust potentiometers. Determine F start and F stop for L position of BAND MODE switch.
28	MODULATION Switch	Black bar knob/3-position switch. Selects modulation mode:
	OFF Position	Disables both internal and external modulation capability; unit generates only single-frequency or swept RF signal.
	INTERNAL Position	Enables internal 1 kHz modulator. Unit generates square-wave AM single-frequency or swept RF signal.
	EXTERNAL Position	Disables internal modulator and enables external modulation circuitry; unit generates single frequency AM or swept RF signal. Modulating signal is externally generated.
29	MODULATION PERCENT Control	Black knob/potentiometer. Controls depth of modulation from zero to 100% for internal and external modulating signals (external signal must be negative ≥ 5V p-p for 100% modulation).
30	SWEEP MODE TRIGGER Switch	Three-position toggle switch. Selects triggering signal for the start of each sweep:
	LINE Position	The start of each sweep is triggered by a pulse generated in synchronization with line-frequency zero crossings.
	AUTO Position	The start of each sweep is automatically triggered a fixed period after the end of the previous sweep.

FIGURE 3.1 INDEX	ITEM	FUNCTION
	EXTERNAL/MANUAL Position	The start of sweep can be initiated by pressing the front-panel MANUAL TRIGGER pushbutton, or by supplying a > 1 mS pulse to J12 EXT TRIG.
31	MANUAL TRIGGER Switch	Black pushbutton switch. When the TRIGGER switch is in the EXTERNAL/MANUAL position, this switch is used to manually trigger the start of sweep.
32	LOW BAND RF OUT J6 Connector	Precision Type "N" connector. This connector is the main low band RF output point; it should be terminated at all times for proper operation and radiation safety.
33	LOW BAND PA MALF	Red indicator. Lights to indicate that the RF output from the low band power amplifier is below a pre-determined acceptable power.
34	LOW BAND LEVELER IN J7 Connector	Four-pin connector. Mates with leveler cable assembly (not supplied). This connector is keyed so that the low band leveler cable will only mate with it, not J5.
35	LOW BAND OSC MALF Indicator	Red indicator. Lights to indicate that the RF output of the low band oscillator is below a pre-determined acceptable level.
36	LOW BAND LEVELER ADJ INCR Control	Capped screwdriver-adjust potentiometer. Sets operating point of low band leveling circuitry for desired output power. This control has an approximate range of 6 dB.
37	LOW BAND LEVEL MALF Indicator	Red indicator. Lights to indicate that the low band leveling circuits are not operating within specifications.

FIGURE 3.1 INDEX	ITEM	FUNCTION
38	HIGH BAND LEVELER IN J5 Connector	Four-pin connector. Mates with leveler cable assembly (not supplied). This connector is keyed so that the high band leveler cable will only mate with it, not J7.
39	HIGH BAND PA MALF Indicator	Red indicator. Lights to indicate that RF output from the high band power amplifier is below a pre-determined acceptable power.
40	HIGH BAND LEVELER POWER ADJ INCR Control	Capped screwdriver-adjust potentiometer. Sets operating point of high band leveling circuitry for desired output power. This control has an approximate range of 6 dB.
41	HIGH BAND OSC MALF Indicator	Red indicator. Lights to indicate that the RF output from the high band oscillator is below a pre-determined acceptable amplitude.
42	HIGH BAND LEVEL MALF Indicator	Red indicator. Lights to indicate that the high band leveling circuits are not operating within specifications.
43	HIGH BAND RF OUT J4	Waveguide flange, size WR-90 (UG-39/U). This connector is the main high band RF output point; it should be terminated at all times for proper operation and radiation safety.

Table 3.2 Rear Panel Connectors

FIGURE 3.2 INDEX	ITEM	FUNCTION
1	DC SIGNAL J2 Connector	Sixteen-pin connector. This connector is the input point for the external 28 VDC power supply; the connector is keyed so that the mating cable (not supplied) will mate only with it, not J1. Pin assignments are listed in Section 2 of this manual.

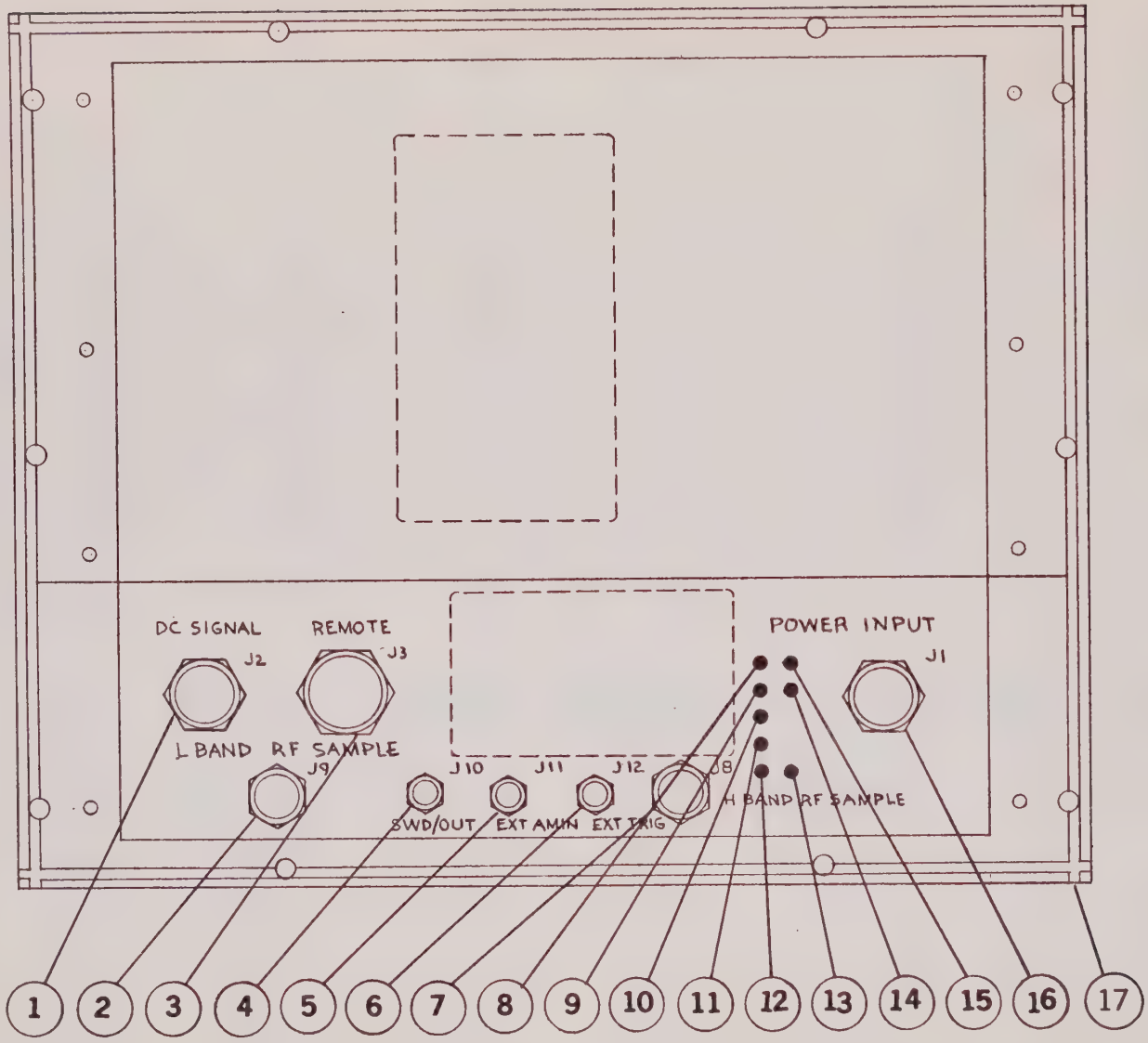

Figure 3.2 Rear Panel Connectors

FIGURE 3.2 INDEX	ITEM	FUNCTION
2	L BAND RF SAMPLE J9	Precision Type "N" connector. This connector is the auxiliary low band RF output point; when the unit is adjusted for a main output of 1 W, the output at this point is ≈ 10 mW (+10 dBm). This is more than sufficient to drive almost any frequency counter, modulation meter, etc.
3	REMOTE J3 Connector	Sixty-one pin EMI shielded connector. All remote control and indication functions are coupled through this connector (mating cable not supplied). Pin assignments are listed in Section 2 of this manual.
4	SWP/OUT J10 Connector	BNC connector. This connector carries the zero to +10 V ramp output of the sweep circuits; the display unit or oscilloscope X-axis input is normally driven from this point.
5	EXT AM J11 Connector	BNC connector. Accepts external modulating input signal. The external AM signal is only connected when the front-panel MODULATION switch is set to EXTERNAL.
6	EXT TRIG J12 Connector	Isolated BNC connector. Accepts an external triggering signal to start the sweep when the SWEEP MODE TRIGGER toggle switch is set to EXTERNAL/MANUAL.
7	H BAND RF SAMPLE J8	Precision Type "N" connector. This connector is the auxiliary high band RF output point; nominal level is ≈ + 10 dBm.

FIGURE 3.2 INDEX	ITEM	FUNCTION
8	TP1 115 VAC Test Point	White test point. The neutral side of the 115 VAC line is brought out to this point for ease of measurement.
9	TP3 +28 VDC Test Point	Yellow test point. The positive side of the 28 VDC line is brought out to this point for measurement.
10	TP5 GND Test Point	Black test point. Chassis ground.
11	TP6 +250 VDC Test Point	Red test point. The positive side of the +250 VDC supply is brought out to this point (negative side is chassis ground).
12	TP7 +20 VDC Test Point	Orange test point. The positive side of the +20 VDC supply is brought out to this point (negative side is chassis ground).
13	TP8 -20 VDC Test Point	Violet test point. The negative side of the -20 VDC supply is brought out to this point (positive side is chassis ground).
14	TP4 28 VDC RET Test Point	Brown test point. The negative side of the 28 VDC line is brought out to this point.
15	TP2 115 VAC Test Point	Grey test point. The hot side of the 115 VAC line is brought out to this point.

DO NOT SHORT-CIRCUIT ANY OF THE ABOVE TEST POINTS TO GROUND, TO TP5, OR TO EACH OTHER.

FIGURE 3.2 INDEX	ITEM	FUNCTION
16	POWER INPUT J1 Connector	Sixteen-pin connector. This connector is the input point for the 115 VAC line; the connector is keyed so that the mating cable (not supplied) will mate only with it, not J2. Pin assignments are listed in Section 2 of this manual.
17	Running Time Meter (Not Shown)	Six-digit time totalizer. Reads in hours and tenths (red digit) total time 115 VAC power is applied to unit. Located on side panel.

3.3 OPERATING INSTRUCTIONS

The operating instructions are divided into First Time Operating and Checkout Procedures and Operating Procedures. It is not necessary to perform the first set of procedures unless the operator is unfamiliar with the Model 506 Signal Source. Operating procedures begin on page 3-23.

3.3.1 First Time Operating and Checkout Procedure. To operate a new unit for the first time, or to gain familiarity with the operation of the unit, perform the procedure detailed below. This procedure should also be performed to aid in receiving inspection of a new unit. If malfunctions are noted, refer to the companion Maintenance manual.

The external test equipment listed in Table 3.3 is required to completely check the Signal Source using this procedure; equivalent equipment may be used. The equipment used in this procedure is not required to be as accurate as that used in the Acceptance Test Procedure (ATP), and this procedure is not intended to substitute for or supercede the ATP:

Table 3.3 Recommended Test Equipment

TYPE OF EQUIPMENT	RECOMMENDED MODEL	QUANTITY
RF Power Meter	Kruse Electronics 4020	1
Waveguide to "N" Transition	DeMornay-Bonardi DGB-057	1
Coaxial Attenuator, 30 dB ("N")	Narda 757B-30	1
Coaxial Attenuator, 10 dB ("N")	Narda 757C-10	1
Crystal Detector ("N")	Hewlett Packard 423A	1
BNC through-termination, 50 Ω	Tektronix 011-0049-01	1
AC/DC Multimeter	Systron-Donner 7000A	1
Oscilloscope ♦	Tektronix 535A/1A7 plug-in	1 ♦
Display Unit ♦	Kruse 7000/7010 plug-in	1 ♦
Frequency Counter	Systron-Donner 6316B	1
Function Generator	Datapulse 401	1
Cables with "N" Connectors	-	-
Cables with "BNC" Connectors	-	-
Coaxial Termination, 50 Ω 3W ("N")	Narda 375NM	3
Waveguide Termination, 3W (WR-90)	Narda 300C/42X1	1
Test Fixture ★	Kruse Electronics 9029	1 ★
Power Supply, 28 VDC ■	Trygon HR40-5B	1 ■

♦ Choose One ★Optional ■ Not required if 28 VDC is in system

a. If applicable, install the unit in accordance with the instructions in Section 2 of this manual.

b. Prepare the necessary cables and controls for power and remote operation of the unit. The information needed is in Section 2. For bench testing, use a Kruse Model 9029 Test Fixture and connect the appropriate cables to rear panel connectors J1, J2 and J3.

c. Make sure that all five POWER switches are set to OFF.

d. Connect the 115 VAC and 28 VDC power lines to appropriate power sources. If a 9029 is used, set the "115 VAC", "28 VDC", REMOTE POWER and REMOTE RF ON switches to "on".

e. Set the DRAWER 28 VDC switch to ON; determine that the 28 VDC indicator lights.

f. Set the DRAWER 115 VAC 60 HZ switch to ON; determine that the 115 VAC 50 HZ indicator lights.

g. Set the DRAWER 28 VDC switch to OFF; determine that the 28 VDC and 115 VAC 60 HZ indicator go out. Without 28 VDC power, the Signal Source will not operate. The running time meter on the side of the chassis does not operate unless the DRAWER 115 VAC 60 HZ and the DRAWER 28 VDC switches are ON.

h. Re-set the DRAWER 28 VDC switch to ON and determine that the 115 VAC 60 HZ and 28 VDC indicators lights.

i. Turn the SWP/OSC power switch to ON and determine that the SWP/OSC ON indicator lights.

IN THE FOLLOWING STEPS, BE SURE TO USE AN ISOLATED METER TO MAKE THE MEASUREMENTS. DO NOT USE A METER WHICH HAS A COMMON CHASSIS GROUND AND METER RETURN CONNECTION.

j. With the ac/dc multimeter, check for 115 VAC between test points TP1 (white) and TP2 (grey) on the rear panel. The voltage must be between 103.5 and 126.5 VAC.

k. Check for 28 VDC between TP3 (yellow) and TP4 (brown) on the rear panel. The voltage must be between 25.2 and 20.8 VDC.

l. Measure between TP6 (red) and TP5 (black) on the rear panel; determine that the voltage is between 225 and 275 VDC.

m. Measure between TP7 (orange) and TP5 (black) on the rear panel; determine that the precision power supply voltage is +20 ± .02 VDC.

n. Measure between TP8 (violet) and TP5 (black) on the rear panel; determine that the second precision power supply voltage is -20 ± .02 VDC.

o. Set the front-panel BAND MODE switch to H1, the SWEEP SELECT switch to MANUAL SCAN, and the MANUAL SCAN/VERNIER control to X10.

p. Set the SWEEP MODE TRIGGER toggle switch to AUTO, the MODULATION switch to OFF, and the PERCENT control to 0.

q. Connect a dc-coupled oscilloscope to the rear panel SWP/OUT connector J10.

r. Rotate the MANUAL SCAN/VERNIER control and watch the oscilloscope; the level should change from about zero to about +10 VDC.

WARNING

MICROWAVE AND OTHER RADIO FREQUENCY RADIATION IS POTENTIALLY HARMFUL. ALWAYS TERMINATE THE RF OUTPUTS OF THIS DEVICE; DO NOT LOOK INTO OPEN WAVEGUIDES, COAXIAL LINES, OR ANTENNAS.

s. Terminate rear panel L BAND SAMPLE OUT J9 with a coaxial 50 Ω load.

t. Terminate rear panel H BAND SAMPLE OUT J8 and front-panel LOW BAND RF OUT J6 with similar units.

u. Connect a length of WR-90 waveguide between J4 HIGH BAND RF OUT and connector J72 of the supplied 1056-1 high-band directional detector, or connect the directional detector directly to J4.

v. Connect a leveling cable (Kruse 948257) between J5 HIGH BAND LEVELER IN and connector J54 of the directional detector.

w. Terminate the output of the directional detector at J73 with a waveguide to Type "N" transition.

x. Attach the 30 dB attenuator to the output of the transition.

y. Turn on the power meter and allow it to fully stabilize; calibrate and zero the meter in accordance with the manufacturer's instructions.

z. Attach the power head of the power meter to the 30 dB attenuator. If the power meter has a range switch, set it for +5 dBm (3 mW).

CAUTION

TO AVOID DAMAGE TO THE POWER METER, DETERMINE THAT A 30 DB ATTENUATOR CAPABLE OF DISSIPATING AT LEAST 2 WATTS IS USED.

aa. Set the SWEEP SELECT switch to MANUAL SCAN and the MANUAL SCAN/ VERNIER control to X1.

ab. Set the H BAND PA ON power switch to ON. Verify that the ON indicator lights. The H BAND PA MALF indicator will light and remain lighted for 60 seconds. After 60 seconds the built-in delay circuitry in the power amplifier will trip and the MALF indicator will go out.

ac. Set the SWEEP MODE switch to H1; if remote control is being used, be sure the remote "rf on" switch is at "on".

ad. The power meter will indicate approximately 0 dBm (1 mW); this is 30 dB below the 1 W which is actually the output of the Signal Source.

ae. Remove the cap from the HIGH BAND LEVELER POWER ADJ INCR control; with a screwdriver, slowly adjust this control and note its effect on the power meter reading. This control has a range of about 6 dB.

NOTE

Do not be concerned if the indicated RF amplitude noted was not exactly 1 mW. The power meters, attenuators, and lines used to calibrate the Signal Source at the factory are precisely calibrated units with special certification, and are much more accurate than the normal lab-quality instruments used in this procedure.

af. Set the MANUAL SCAN/VERNIER control mid-way between X1 and X10, then set the HIGH BAND LEVELER ADJ INCR control for a power meter reading of 0 dBm (1 mW).

NOTE

The frequency control potentiometers under the ACCESS TO FREQUENCY BAND SET cover are shipped from the factory in maximum CW (all STOP controls) or maximum CCW (all START controls) positions. Steps ak through bk will aid you in setting these controls to the proper positions. In case of apparent malfunction, complete these steps before consulting the companion Maintenance manual.

ag. Set the BAND MODE switch to RF OFF.

ah. Remove the termination from J8 H BAND RF SAMPLE on the rear panel.

ai. Connect a frequency counter that covers the high band frequencies of interest to J8; use a 10 dB attenuator between the counter input and J8 (the power level at this point is a minimum of + 10 dBm).

aj. Set the SWEEP SELECT switch to F START and the BAND MODE switch to H1.

ak. Determine the H1 start frequency; adjust the H1 START control under the ACCESS TO FREQUENCY BAND SET cover for the desired H1 start frequency.

al. Set the BAND MODE switch to H2 and determine the H2 start frequency; adjust the H2 START control if desired.

am. Repeat step al for the H3 and H4 positions of the BAND MODE switch.

an. Set the SWEEP SELECT switch to F STOP and the BAND MODE switch to H1. Determine the H1 stop frequency; if desired, adjust the H1 STOP control for the proper H1 stop frequency.

ao. Repeat step an for the H2, H3 and H4 positions of the BAND MODE switch.

ap. Set the SWEEP SELECT switch to 10 SECONDS; with the frequency counter, determine that the unit is sweeping between the low and high limits of H4.

aq. Determine that the unit is properly sweeping H3, H2 and H1.

ar. Set the SWEEP MODE TRIGGER switch to EXTERNAL/MANUAL. Determine that a sweep is initiated when the MANUAL TRIGGER pushbutton is pressed. The triggering signal requirements are listed in Paragraph 1.5.

as. Set the SWEEP MODE TRIGGER switch to LINE; determine that the start of each sweep is coincident with the line frequency. It will be easier to determine this if the SWEEP SELECT switch is set to .1 SECONDS and the external display or oscilloscope is triggered on "line".

at. Set the SWEEP SELECT switch to MANUAL SCAN; leave the BAND MODE switch at H1.

au. Slowly adjust the MANUAL SCAN/VERNIER control over its entire range; note that power variations do not exceed ± 0.2 dB. If power variations in excess of ± 0.2 dB at certain frequencies are noted, the cause is much more likely to be frequency sensitivity of the power meter than an error in the Signal Source. To determine the source of error, record the frequencies at which power variations exceed ± 0.2 dB, then check the calibration of the power meter with an external secondary standard which covers the band of frequencies set for H1.

av. Again adjust the MANUAL SCAN/VERNIER control over its range; applying appropriate correction factors at each frequency, determine that power level variations do not exceed ± 0.2 dB.

aw. Repeat steps au and av for the H2, H3 and H4 positions of the BAND MODE switch.

ax. Set the BAND MODE switch to RF OFF. Remove the power meter power head and the 30 dB pad from the waveguide to "N" transition.

ay. Remove the coaxial termination from J6 LOW BAND RF OUT and attach it to the waveguide to "N" transition. Attach the power head and 30 dB attenuator to J6.

az. Connect a cable with Type "N" male connectors between J6 LOW BAND RF OUT and connector J97 of the supplied 1051-1 low-band directional detector; a dual male adapter may be used instead of a cable.

ba. Connect a leveling cable (Kruse 948258) between J7 LOW BAND LEVELER IN and connector J83 of the directional detector.

bb. Connect a coaxial termination to connector J98 of the low band directional detector.

bc. Remove the termination from J9 and the cable attenuator from J8. These connectors are on the rear panel.

bd. Attach the termination removed in step bc to J8.

be. Connect a frequency counter that covers the low band frequencies of interest to J9; use a 10 dB attenuator between the counter input and J9 (the power level is a minimum of 10 mW, or + 10 dBm).

bf. Set the L BAND PA ON power switch to ON. Verify that the ON indicator lights.

bg. Set the BAND MODE switch to L and the MANUAL SCAN/VERNIER control mid-way between X1 and X10.

bh. Check the power meter reading; it should be 0 dBm (1 mW). If necessary, remove the cover from the LOW BAND LEVELER POWER ADJ INCR control and adjust it.

bi. Set the SWEEP SELECT switch to F START.

bj. Determine the L band start frequency; if desired, adjust the L START control for the proper frequency.

bk. Set the SWEEP SELECT switch to F STOP and determine the L band stop frequency. Adjust the L STOP control for the proper frequency.

bl. Ensure that power level variations do not exceed ± 0.2 dB over the entire range of the MANUAL SCAN/VERNIER control. Do not fail to account for losses and frequency sensitivities in the power meter and attenuator when making this measurement (refer also to step au).

bm. Set the BAND MODE switch to RF OFF.

bn. Remove the power head from J6 LOW BAND RF OUT. Leave the 30 dB attenuator connected to J6.

bo. Connect the 10 dB attenuator in series with the 30 dB unit, for a total of 40 dB. Connect the crystal detector to the output of this 40 dB attenuator.

bp. Connect a BNC cable between the output of the crystal detector and the input of the 50 Ωthrough-termination. Connect the output of the through-termination to the vertical input of the display unit or oscilloscope. A BNC Tee fitting (UG-274A/U) and a BNC 50 Ω termination (Amphenol 35650-50) may be used in place of the through-termination.

bq. Connect a BNC cable between the horizontal (sweep) input of the display unit or oscilloscope and J10 SWP/OUT on the rear panel of the Signal Source.

br. Set the MODULATION switch to INTERNAL, and PERCENT control to 100, the SWEEP SELECT switch to .1 SECONDS, and the MANUAL SCAN/VERNIER control to X1.

bs. Set the BAND MODE switch to L. If necessary, adjust the MANUAL SCAN/VERNIER control for a stable display of the 1 kHz modulating waveform.

bt. Adjust the PERCENT control over its range and observe its effect.

bu. Connect the output of a function generator to J11 EXT AM IN on the rear panel of the signal source. The output of the generator must be ac-coupled or negative-going; the amplitude must be set to 2 - 5 V p-p at a frequency not to exceed 5 kHz.

bv. Set the MODULATION switch to EXTERNAL; observe the effect of changing the amplitude, waveform and frequency of the external signal.

bw. Set the MODULATION control to OFF and the BAND MODE switch to OFF.

bx. Remove the crystal detector and 40 dB attenuator from J6 LOW BAND RF OUT and the coaxial termination from the output of the waveguide to "N" transition.

by. Connect the coaxial termination to J6 and the 40 dB attenuator/crystal detector combination to the output of the waveguide to "N" transition.

bz. Set the BAND MODE switch to H1, then repeat steps bt through bw.

NOTE

This concludes the First Time Operating and Checkout Procedure. Complete steps ca through ch to shut down the Signal Source.

ca. Set the BAND MODE switch to RF OFF.

cb. Set the remote "rf on" switch to "off".

cc. Set the H BAND PA ON switch to OFF and verify that the indicator goes out.

cd. Set the L BAND PA ON switch to OFF and verify that the indicator goes out.

ce. Set the SWP/OSC ON switch to OFF and verify that the indicator goes out.

cf. Set the DRAWER 115 VAC 60 HZ power switch to OFF and verify that the indicator goes out.

cg. Set the DRAWER 28 VDC power switch to OFF and verify that all indicators are out.

ch. Remove all terminations, test equipment, cables and waveguides from the Signal Source.

3.3.2 Operating Procedures. The Model 506 Microwave Signal Source should only be operated by personnel thoroughly familiar with its controls and indicators and experienced in its operation. To gain familiarity with the unit, read all of this Section before attempting operation. If a unit is available, perform the First Time Operating and Checkout Procedures of Paragraph 3.3.1.

NORMAL OPERATING PROCEDURE. For normal daily operation of the Model 506 Signal Source, the following sequence of events should be observed:

a. Set the DRAWER 28 VDC breaker switch to ON. The 28 VDC indicator will light white. Without 28 VDC power, the unit will not function.

b. Set the DRAWER 115 VAC 60 HZ breaker switch to ON. The 115 VAC 60 HZ indicator will light white also.

c. Set the SWP/OSC ON breaker switch to ON. The ON indicator will light white indicating that the sweep circuits and RF oscillators have been turned on ;the STATUS READY indicator will light green. If there is a malfunction in these circuits at this time, the appropriate MALF indicators will light red. Check the DRAWER MALF PRESS TO RESET indicator; if it is lighted, check the high band and low band OSC MALF indicators and the SWEEP MALF indicator to determine the nature of the malfunction.

d. Set the BAND MODE switch to RF OFF.

e. Wait at least 30 minutes after turning on the sweep circuits and RF oscillators to make any measurements or perform tests. These circuits will operate immediately after being energized, but the Signal Source may not meet specifications until the 30 minute period has elapsed.

f. During the 30 minutes stabilization period, check the test setup to be sure the external directional detectors (levelers) are properly connected, that all connections are tight, and that no RF outputs remain unterminated.

WARNING

MICROWAVE AND OTHER RADIO FREQUENCY RADIATION IS POTENTIALLY HARMFUL. ALWAYS TERMINATE THE RF OUTPUTS OF THIS DEVICE; DO NOT LOOK INTO OPEN WAVEGUIDES, COAXIAL LINES, OR ANTENNAS.

g. Set the H BAND PA ON and the L BAND PA ON breaker switches to ON. Both ON indicators will light white indicating that the high band and low band power amplifiers have been turned on. At this point, however, the amplifiers have not been enabled; there will be no RF output.

NOTE

The high band power amplifier has a built-in 60 second delay circuit. It will not be possible to enable the amplifier and generate high band RF until 60 seconds after the H BAND PA ON breaker switch has been set to ON; the HIGH BAND PA MALF indicator will be lighted red during this interval. There is no similar circuit in the low band power amplifier.

h. Set the BAND MODE switch to the frequency band of interest.

i. Scan the MALF indicators for signs of malfunction in the instrument; the DRAWER MALF PRESS TO RESET indicator will light in conjunction with any other MALF indicator, and may be thought of as the "master" malfunction indicator. Pressing this switchbutton will clear the malfunction circuits if a momentary overload or condition has caused an indicator to light.

j. Set the SWEEP SELECT switch to the desired sweeping or single frequency mode of RF generation; the sweep start and sweep stop frequencies can be accurately determined by connecting a frequency counter to J8 H BAND RF SAMPLE on the rear panel and setting the SWEEP SELECT switch to F START and F STOP. The Signal Source can be set to any single frequency between these points using the MANUAL SCAN/VERNIER control when the SWEEP SELECT switch is at MANUAL SCAN.

k. If the signal is to be swept from F start to F stop, select the sweep speed and trigger mode. Normally, this SWEEP MODE TRIGGER switch should be left at AUTO. If it is desired that the start of sweep coincide with the AC line frequency, set the switch to LINE. When the switch is set to EXTERNAL/MANUAL, the sweep may be initiated by pressing the front panel MANUAL pushbutton or with an external signal.

NOTE

The proper procedure for turning off the Signal Source is given in steps m through r.

m. Set the BAND MODE switch to RF OFF.

n. Set the L BAND PA ON breaker switch to OFF; the white ON indicator will go out.

o. Set the H BAND PA ON breaker switch to OFF; the white ON indicator will go out.

p. Set the SWP/OSC breaker switch to OFF; the white ON indicator and green STATUS READY indicator will go out.

q. Set the DRAWER 115 VAC 60 HZ breaker switch to OFF; the white ON indicator will go out.

r. Set the DRAWER 28 VDC breaker switch to OFF; the white indicator will go out. At this point, the Signal Source is completely off.

EMERGENCY SHUT-DOWN PROCEDURE. The Signal Source may be completely inactivated at any time by removing 28 VDC power. This can be done by turning off the power supply, by remote control, or by setting the front panel DRAWER 28 VDC breaker switch to OFF.

CIRCUIT BREAKERS. The power switches also function as circuit breakers. The handle of the circuit breaker when it has tripped is straight out, mid way between the ON and OFF positions. To reset one of these breaker switches after it has tripped (and the overload has been removed), set the toggle handle completely to OFF, wait a moment, then move it to ON.

REMOTE OPERATION. For remotely controlled operation of the Signal Source, the following sequence of events should be used:

a. Set the remote control main power switches to "off". Set the remote control "rf on" switch to "off".

CAUTION

b. Set the BAND MODE switch on the front panel of the Signal Source to REMOTE.

c. Set the DRAWER 28 VDC breaker switch to ON. Determine that the 28 VDC indicator does not light.

d. Set the DRAWER 115 VAC 60 HZ breaker switch to ON. Determine that the 115 VAC 60 HZ indicator does not light.

e. Set the SWP/OSC ON, H BAND PA ON, and L BAND PA ON breaker switches to ON. The three ON indicators will not light.

f. Set the front panel SWEEP SELECT, SWEEP MODE TRIGGER, and MODULATION switches to the desired positions.

Maintenance Manual Changes
Model 506 Microwave Signal Source
June 22, 1973

TO ALL HOLDERS OF MODEL 506 MAINTENANCE INSTRUCTION MANUALS:

Note the following changes in your manuals:

Page 5-2	Table 5.1: change part number of High Band Harmonic Filter from 962050 to 962080.
Page 5-33	Figure 5.10; on right-hand side of drawing, in the middle of the page: change part number of High Band Harmonic Filter Assembly from 962050 to 962080.

MODEL 506
INSTRUCTION MANUAL CHANGES
6-6-73

TO ALL HOLDERS OF MODEL 506 INSTRUCTION MANUALS:

Replace pages i and 5-33/34 with the enclosed pages.

Where reproducible copies were originally supplied, page 5-33/34 is correct as supplied. Replace page i with the enclosed vellum copy.

Kruse Electronics

INSTRUCTION MANUAL

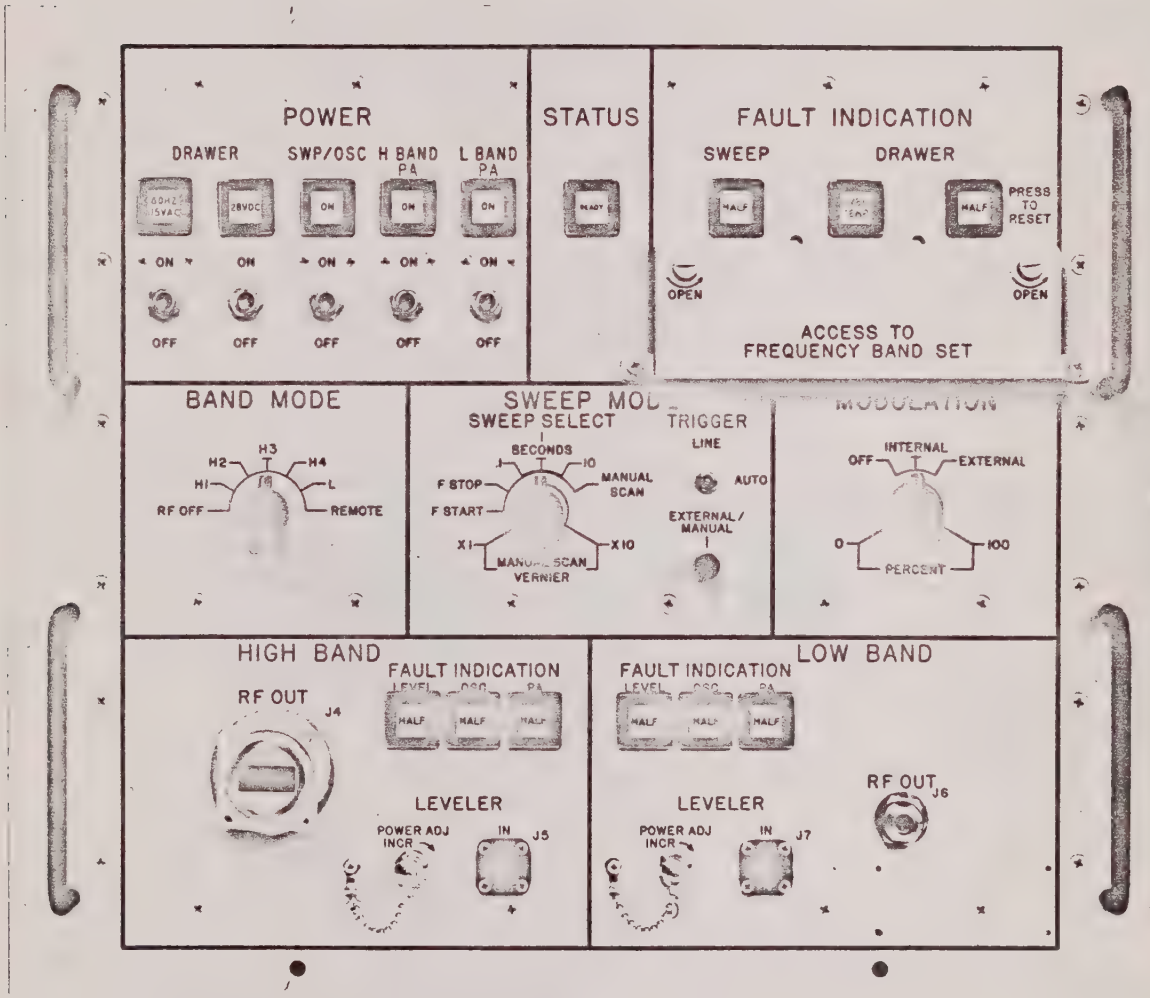

MAINTENANCE

KRUSE ELECTRONICS

MODEL 506

MICROWAVE
SIGNAL SOURCE

© Copyright 1972, Systron-Donner Corporation

KRUSE ELECTRONICS
DIVISION
SYSTRON DONNER
CORPORATION

735 Palomar Avenue, Sunnyvale, California 94086 USA
Telephone (408) 735-9660, TWX 910-339-9309

INTRODUCTION

This manual contains the theory of operation and maintenance information for the Kruse Electronics Model 506 Microwave Signal Source. In addition, such maintenance aids as waveform photographs, schematic diagrams, and parts lists are also contained in this manual. The companion operation manual provides application information and operating instructions.

LIST OF EFFECTIVE PAGES

PAGE	CHANGE
i	6-6-73
ii	Original
iii	Original
iv	Original
4-1 through 4-28	Original
5-1 through 5-32	Original
5-33	6-6-73
5-34	Blank
5-35 through 5-46	Original
6-1 through 6-3	Original
6-4	Blank
6-5 through 6-23	Original
6-24	Blank

NOTE 1) All Original pages are dated 9-15-72 (September 15, 1972)

NOTE 2) Please report errors and omissions in this manual to Kruse Electronics division of Systron-Donner Corporation, 735 Palomar Avenue, Sunnyvale, California 94086. This report should include the manual title, date of last change, and the exact location (by page, paragraph, line, or figure) of the error. Also include the model number, serial number, and numbers of modifications or options (if any) pertinent to your instrument.

TABLE OF CONTENTS

SECTION/ PARAGRAPH	TITLE	PAGE
SECTION 4	THEORY OF OPERATION	4-1
4.1	SCOPE	4-1
4.2	GENERAL	4-1
4.3	POWER DISTRIBUTION	4-3
4.4	POWER SUPPLIES	4-5
4.4.1	+20 V Power Supply	4-5
4.4.2	-20 V Power Supply	4-5
4.4.3	+250 V Power Supply	4-5
4.4.4	Line Trigger Reference	4-7
4.4.5	+10 V Source	4-7
4.5	BUILT-IN-TEST FUNCTIONS	4-7
4.5.1	Over-Temp Malfunctions	4-7
4.5.2	Power Malfunctions	4-9
4.5.3	Status Ready Indicator	4-9
4.5.4	Sweep Malfunctions	4-9
4.5.5	Oscillator Malfunctions	4-10
4.5.6	Power Amplifier Malfunctions	4-11
4.5.7	Leveling Malfunctions	4-11
4.5.8	Inhibiting Circuitry	4-11
4.6	RESET CIRCUITRY	4-12
4.7	RF CIRCUITS	4-13
4.7.1	High Band	4-13
4.7.2	Low Band	4-17
4.8	SWEEP CIRCUITS	4-17
4.8.1	Ramp Generator	4-18
4.8.2	Operational Amplifier	4-21
4.9	FREQUENCY SET CIRCUITS	4-24
4.9.1	High Band Frequency Set Circuits	4-24
4.9.2	Low Band Frequency Set Circuits	4-25
4.10	MODULATION CIRCUITS	4-25
SECTION 5	MAINTENANCE	5-1
5.1	MAINTENANCE PHILOSOPHY	5-1
5.2	ROUTINE MAINTENANCE	5-6
5.3	CALIBRATION	5-6
5.3.1	Printed Circuit Assembly A2, Trigger Sweep	5-8
5.3.2	Printed Circuit Assembly A3, Operational Amplifier	5-8
5.3.3	Printed Circuit Assembly A4, Built-in-Test #1	5-8
5.3.4	Printed Circuit Assembly A5, Built-in-Test #2	5-10
5.3.5	Printed Circuit Assembly A6, Trigger Holdoff	5-10
5.3.6	Printed Circuit Assembly A7, Reset	5-11

SECTION/ PARAGRAPH	TITLE	PAGE
SECTION 5	MAINTENANCE (CONT'D)	
5.4	PERFORMANCE CHECK	5-11
5.4.1	Equipment Required	5-11
5.4.2	Initial Setup	5-12
5.4.3	Power Supply Tests	5-13
5.4.4	BIT Function Checks	5-14
5.4.5	Remote Control Function Checks	5-16
5.4.6	Sweep Generator Tests	5-18
5.4.7	Frequency Band Adjustment and Accuracy Tests	5-20
5.4.8	RF Output Level and Flatness Tests	5-22
5.4.9	Modulation Tests	5-25
5.4.10	Spectral Purity Measurements	5-28
5.5	CORRECTIVE MAINTENANCE	5-32
5.5.1	General	5-32
5.5.2	Trouble Isolation	5-32
5.5.3	Module Access	5-32
5.5.4	Waveforms	5-35
SECTION 6	DRAWINGS AND PARTS LISTS	6-1
6.1	DRAWINGS	6-1
6.2	PARTS LISTS	6-1
6.3	REPLACEMENT PARTS	6-1

LIST OF FIGURES

FIGURE	TITLE	PAGE
4.1	Power Distribution Block Diagram	4-4
4.2	Power Supply Block Diagram	4-6
4.3	Built-in-Test Circuits Block Diagram	4-8
4.4	Reset Circuitry Block Diagram	4-12
4.5	RF Signal Flow Diagram	4-14
4.6	DBM to Power Level Conversion Chart	4-16
4.7	Ramp Generator Block Diagram	4-19
4.8	Operational Amplifier Block Diagram	4-22
4.9	Frequency Set Circuits Simplified Schematic (High Band)	4-26
4.10	Frequency Set Circuits Simplified Schematic (Low Band)	4-27
4.11	Modulation Circuits Block Diagram	4-28
5.1	Calibration Adjustment Locations	5-9
5.2	Test Setup for High Band Frequency Adjustment	5-21
5.3	Test Setup for Low Band Frequency Adjustment	5-21
5.4	Test Setup for High Band Output Level Test	5-23
5.5	Test Setup for Low Band Output Level Test	5-23
5.6	Test Setup for High Band Modulation Test	5-26
5.7	Test Setup for Low Band Modulation Test	5-26
5.8	Test Setup for High Band Spectral Purity Test	5-29
5.9	Test Setup for Low Band Spectral Purity Test	5-31
5.10	Module Location	5-33
5.11	Waveforms (Sheet 1)	5-44
5.11	Waveforms (Sheet 2)	5-45
5.11	Waveforms (Sheet 3)	5-46

LIST OF TABLES

TABLE	TITLE	PAGE
4.1	Model 506 Module Identification	4-2
5.1	Module Repair	5-1
5.2	Recommended Spares	5-2
5.3	Calibration Procedures after Module Replacement	5-7
5.4	Recommended Test Equipment	5-11
5.5	Trouble Isolation Guide	5-36

SECTION 4

THEORY OF OPERATION

4.1 SCOPE

This section describes the electronic theory behind the internal circuitry of the Signal Source. Detailed descriptions are given of unique or unusual circuits, or of functions peculiar only to the Model 506. Electronic circuitry and arrangements of microwave components commonly used throughout the industry are described briefly.

The internal circuitry of some sealed units is described where it might be of special interest, or where such a description might contribute to a better understanding of the Signal Source. Such description does not imply any alteration of the maintenance instructions in Section 5 concerning the disassembly of any sealed module.

4.2 GENERAL

The 506 Microwave Signal Source is made up of the following major subsystems: power distribution circuits, power supplies, built-in-test (BIT) circuits, reset circuits, high and low band RF circuits, sweep circuits, frequency setting circuits, and modulation circuits. All systems are, of course, interdependent and a subsystem may occupy more than one module.

The modules in the 506 are listed in Table 4.1.

Table 4.1 Model 506 Module Identification

DESIGNATION	NOMENCLATURE	SUBSYSTEM
A2	Trigger Sweep Printed Circuit Assembly	Sweep
A3	Operational Amplifier Printed Circuit Assembly	Sweep
A4	Built-in-Test #1 Printed Circuit Assembly	BIT
A5	Built-in-Test #2 Printed Circuit Assembly	BIT
A6	Trigger Holdoff Printed Circuit Assembly	Sweep
A7	Reset Printed Circuit Assembly	Power Supply Sweep Modulation
A8	Regulator Printed Circuit Assembly	Power Supply
A9	Extender Printed Circuit Board	
A15	Frequency Set Assembly	Sweep
A16	High Band Amplifier Assembly	High Band RF
A17	High Band Oscillator Assembly	High Band RF
A18	Low Band Oscillator Assembly	Low Band RF
A19	Low Band Amplifier Assembly	Low Band RF
A20	Power Supply Assembly	Power Supply

4.3 POWER DISTRIBUTION

The Signal Source requires 115 VAC and 28 VDC to operate; all other operating power is generated internally. (Refer to Figures 4.1 and 6.2)

DC power is brought in to the Signal Source from an external, user-provided power supply through rear-panel connector J2. The + line is fed through pin S to front-panel circuit breaker switch CB2, DRAWER 28 VDC. The return line, ground line, and shield are all connected to chassis ground near J2.

When the DRAWER 28 VDC circuit breaker switch is set to ON, +28 VDC power is connected to 28 VDC indicator DS2, which lights, to pin L of J37 (Reset board A7), to thermal switch S7 on the chassis, and to terminal B2 of relay K2. Under normal circumstances, when S7 is open, current flows through the normally-closed contacts of relay A7K2 to the coil of power relay K1. A return path for K1 is provided through rear-panel REMOTE connector J3-A. If the instrument user has not provided this return path, the Signal Source will not function further.

Primary AC line power is brought into the instrument through rear-panel connector J1 to DRAWER 115 VAC 60 HZ circuit breaker switch CB1; when CB1 is set to ON, current flows through CB1, the closed contacts of power relay K1 and line filters FL1/FL2 to test points TP1/TP2, running-time meter M1, and 28V power relay K2. As mentioned before, K1 contacts are closed only when:

- 28 VDC has been connected to J2
- CB2 has been set to ON
- A return path for K1 has been provided through J3-A
- Over-temp switch S7 is in its normal (open) position

When K2 contacts are closed, there is a path for +28V through K1 and CB1; CB1-C is the source for +28V buss #1.

Setting circuit breaker switch CB3 (SWP/OSC) to ON connects both sides of the 115 VAC line to Power Supply Assembly A20 and activates +28V buss #2 through terminals C and NO of CB3.

Power is applied to the high and low band power amplifiers, A19 and A16, by setting H BAND PA circuit breaker switch CB4 and L BAND PA circuit breaker switch CB5 to ON. This also connects 28 VDC power to H BAND PA ON indicator DS4 and L BAND PA ON indicator DS5 through the auxiliary contacts of the circuit breakers.

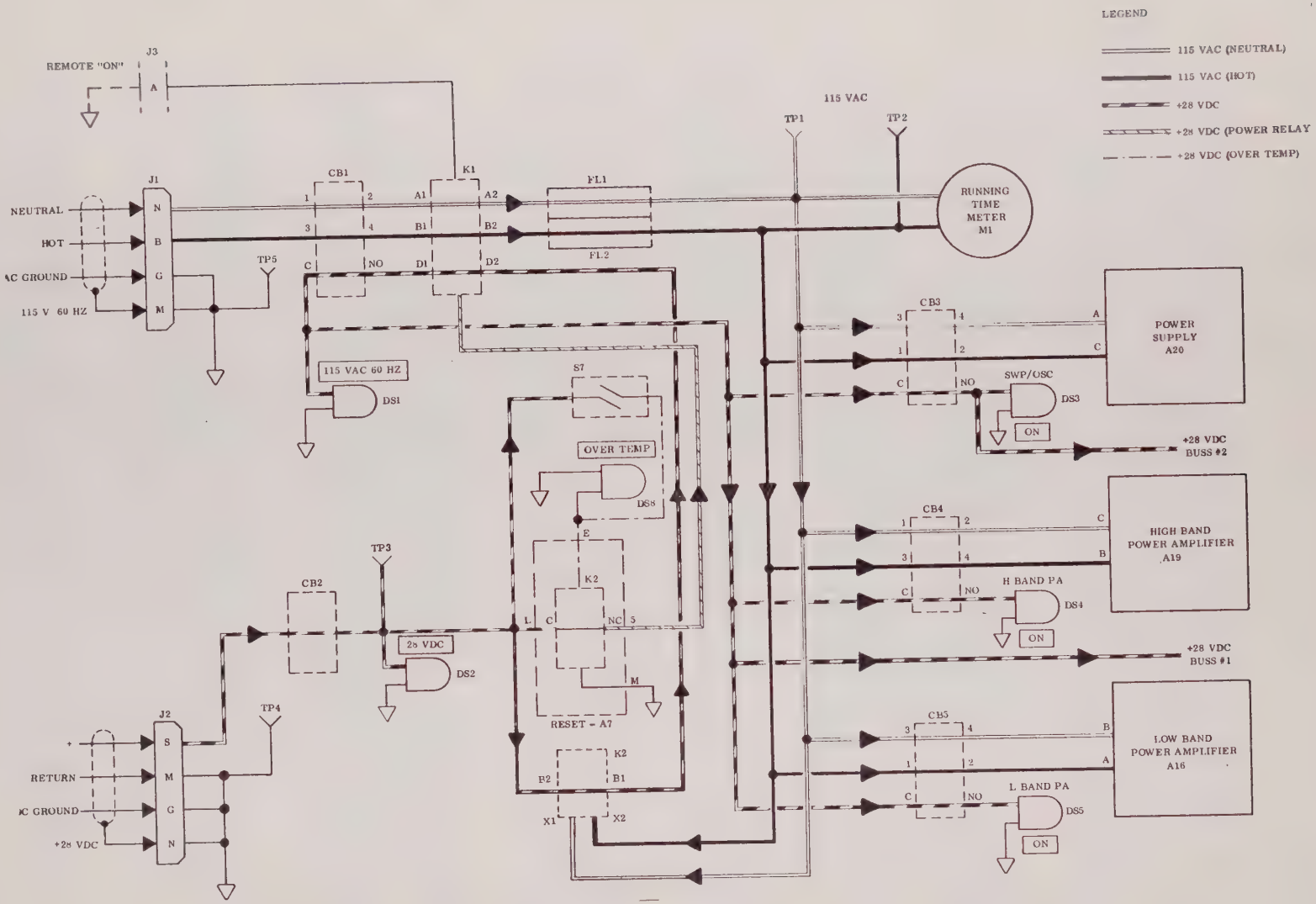

Figure 4.1 Power Distribution Block Diagram

4.4 POWER SUPPLIES

Power Supply Assembly A20 operates from the 115 VAC input to the Signal Source, and generates a regulated +20 VDC, -20 VDC, unregulated +250 VDC and +30 VDC (the 30 VDC output is not used), and a line-frequency reference for the sweep circuitry. Reset Assembly A7 contains a +10 VDC regulator which acts as a source for the F Start-F Stop portion of the sweep circuits. High Band Amplifier Assembly A16 and Low Band Amplifier Assembly A19 include internal power supplies, and do not require external power.

Primary power is coupled through circuit breaker CB3 (SWP/OSC) to the primary of transformer T1 (actually two primary windings connected in parallel). Refer to block diagram Figure 4.2 and schematic diagram Figure 6.3 in Section 6 of this manual.

4.4.1 +20V Power Supply One of the three secondary windings of T1 carries 32.7 VAC; this output is rectified by bridge rectifier A1, filtered, and fed to series regulator Q7; Q7 is controlled by driver Q1 and error amplifier Q2, described below.

The output of Q7 is sampled by error amplifier Q2, an integrated circuit operational amplifier; Q2 amplifies the difference (error) between the reference level across zener diode CR1 and the output of Q7, and increases or decreases the base drive to Q1 (and consequently Q7) to compensate.

The +20 VDC output and the +20V sense line are connected together at J51, the connector for High Band Oscillator Assembly A17. This is because the voltage stability requirements of A17 are the most stringent in the unit. The differential between the +20V output and +20V sense lines can never exceed 600 mV at power supply connector J21, however, because this is the forward drop across diode CR7.

When current demands are excessively heavy, as in the case of a short circuit, error amplifier Q2 will try to raise the voltage output of Q7 to any level necessary to supply those current demands. Without the protection provided by current limiter Q5, this could cause destruction of the power supply within a fraction of a second. Q5 limits the base drive to Q1 to its normal operating level, and consequently will not allow Q1 to over-drive Q7.

4.4.2 -20V Power Supply. The -20 VDC power supply is similar to the +20V power supply, but is not referenced to a zener diode. Instead, the -20V supply is referenced to the +20V supply. This arrangement allows the two supplies to track very closely. The -20 V output and -20 V sense lines are connected together at J51, just as with the +20 V supply.

4.4.3 +250 V Power Supply. +250 VDC is used as a tuning voltage source in the high and low band oscillators, A17 and A18. The 250 V supply need not be regulated, and consists of a simple half-wave rectifier and filter.

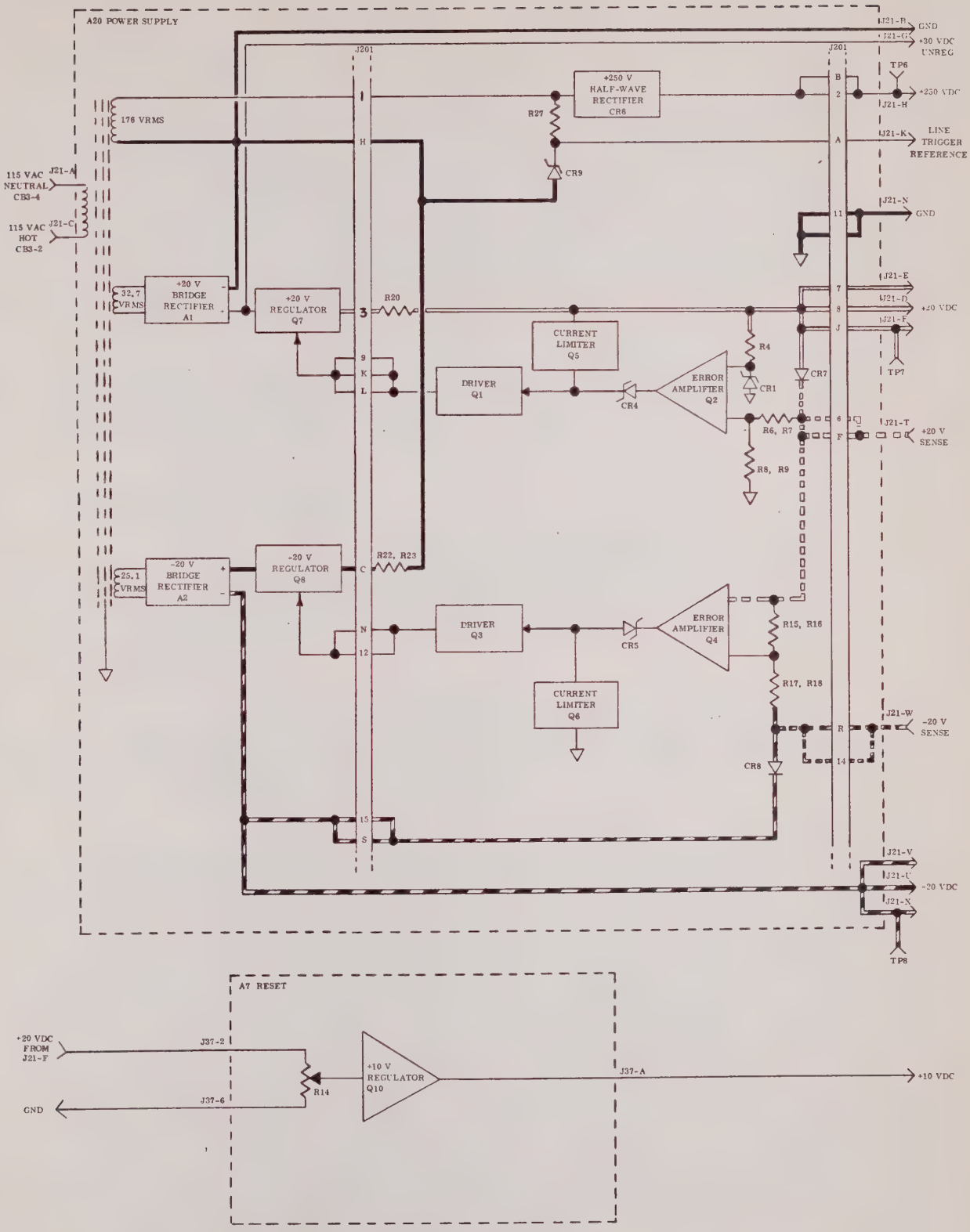

Figure 4.2 Power Supply Block Diagram

4.4.4 Line Trigger Reference. High-value resistor R27 and zener diode CR9 are connected in series across the 176 VAC transformer secondary winding which is used as the source for the +250 V supply. When the transformer voltage at the input to the +250 V rectifier is positive with respect to ground, the voltage at the junction of R27 and CR9 is held at the avalanche voltage of the diode, about 12 volts. When the voltage input to the +250 V rectifier is negative, current flows directly through R27 and CR9 to ground. The resultant output is a line-frequency square wave which ranges from slightly above ground potential to about +12 volts.

4.4.5 +10 V Source. Reset Assembly A7 contains a +10 V source which is operated from the unit +20 V power supply. +10 V regulator Q10 is an integrated circuit operational amplifier connected as a non-inverting current source. Variable resistor R14 is used to set the output level.

4.5 BUILT-IN-TEST FUNCTIONS

The built-in-test (BIT) components include printed circuit assemblies A4 (BIT #1), A5 (BIT #2), eight red front-panel fault indicators, one internal directional detector, various chassis components, and portions of High Band Oscillator Assembly A17, Low Band Oscillator Assembly A18, Frequency Set Assembly A15, Reset Assembly A7, and Low Band Amplifier A19.

Block Diagram Figure 4.3 shows the BIT circuitry in the normal operating state (no malfunction). Refer also to RF Signal Flow Diagram Figure 4.5 and Power Distribution Diagram Figure 4.1. These diagrams derive from schematic diagram Figures 6.2, 6.6, 6.8, 6.9, 6.10, and 6.11 in Section 6 of this manual.

4.5.1 Over-Temp Malfunctions. If the temperature in the drawer exceeds the rated maximum (+ 71° C), thermal switch S7 closes and connects +28 VDC power to OVER TEMP indicator DS8 and to pin E of Reset board A7. (This switch is designed to close at +75° C and stay closed until the temperature drops below +64° C.) The +28 V lights DS8 and fires an SCR on A7 to latch relay K2 in its normally-open position. (Note that although the OVER TEMP indicator will go out when S7 opens again, relay A7K2 will remain latched until it is reset by pressing the PRESS TO RESET switch, S6. Refer to Figures 4.1 and 4.4.) When A7K2 is latched, it no longer connects +28 VDC power to relay K1 on the chassis; K1 opens, causing 115 VAC power to be disconnected from the drawer. Instead, A7K2 connects +28 VDC power through pin D of connector J37 to the anode of diode CR5. 28 VDC is applied through CR5 and pin H of connector J34 to the coil and one swinger of relay K1 on BIT #1 board A4. 28 VDC is also applied through R18 and CR3 to the base of transistor switch Q1, turning the switch "on" and completing a circuit to ground through the coil of K1. Closing of the normally-open K1 relay contacts causes DRAWER MALF indicator DS15 to light and completes a circuit to ground through J34-E and J3-C to light a remote malfunction indicator.

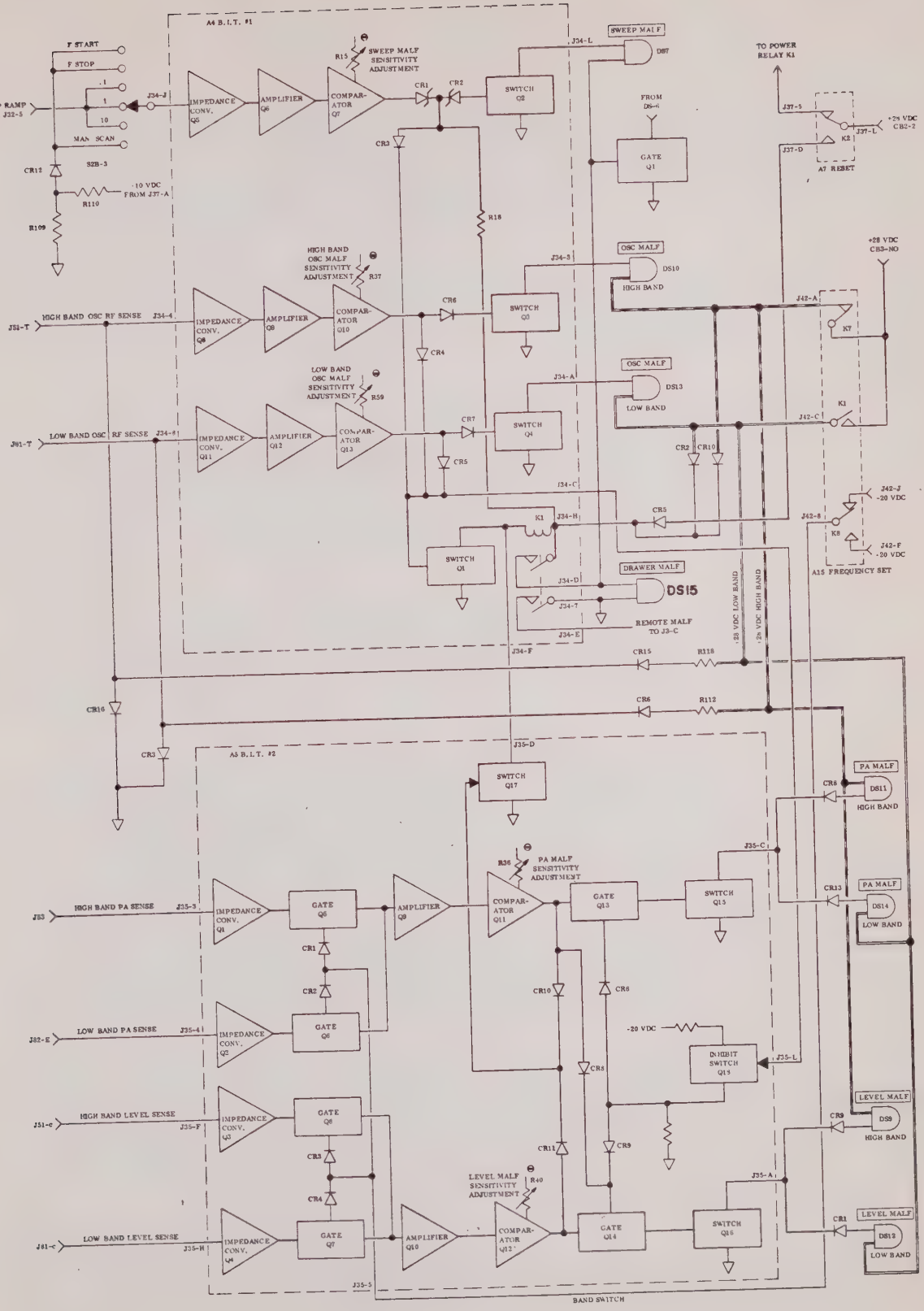

Figure 4.3 Built-in-Test Circuits Block Diagram

4.5.2 Power Malfunctions. In addition to the OVER TEMP, DRAWER MALF, and remote malfunction indicators, SWEEP MALF indicator DS7 will also light to indicate loss of operating power in an over-temp condition. Switch Q2 is "turned on" through Zener diode CR2 completing a path to ground from the lighted DRAWER MALF indicator to ground through DS7 and J34-L.

Under normal operating conditions, Q2 is not turned on by the voltage at the junction of R18 and CR3 because the comparator output through Zener diode CR1 is of sufficient value to keep the voltage at the cathode of CR2 zero. All voltage from J34-H is dissipated in R18.

However, in case of an over-temp malfunction which removes all operating power from the 506 or in the case of a power supply malfunction which affects the + and - 20 V sources, sweep comparator Q7 will not maintain this output. Current from J34-H through R18 and CR2 will then "turn on" switch Q2, and current through R18 and CR3 will "turn on" switch Q1. In either case, both the DRAWER MALF and SWEEP MALF indicators will light.

4.5.3 Status Ready Indicator. Under normal conditions, STATUS READY indicator DS6 connects to ground through gate Q1. However, if +28 V is present at the input of Q1, as will be the case if any malfunction indicator is lighted, the gate is "turned off", preventing DS6 from lighting.

4.5.4 Sweep Malfunctions. When the SWEEP SELECT switch is set to the .1, 1, or 10 second positions, the sweep ramp (0 to +10 V) from the sweep circuits is connected through switch section S2B-3 and pin J of connector J34 to the sweep malfunction circuits. These circuits will light the SWEEP MALF indicator whenever the unit is in a sweeping position but not actually sweeping. This can occur in case of a failure in the sweep circuits or when TRIGGER switch has been set to EXTERNAL/MANUAL and the sweep circuits have not been triggered. In the latter case, the SWEEP MALF indicator will go out as soon as the sweep has been triggered (by the front-panel MANUAL TRIGGER pushbutton or by an external trigger signal), remain out during the sweep, and light again at the end of sweep; the indicator will remain lighted until sweep is initiated again by another trigger.

When the SWEEP SELECT switch is set to non-sweeping positions (F START, F STOP, or MANUAL SCAN) a dc signal is connected from the +10 VDC regulator on A7 through voltage divider R109/R110 and diode CR12 to the sweep malfunction circuits. This dc level simulates the sweep ramp signal to de-energize the sweep malfunction circuits.

Input signals to the sweep malfunction circuits are fed first to impedance converter Q5; Q5 is an integrated circuit operational amplifier. It has extremely high input impedance, unity gain, and a non-inverting, low-impedance output. The output of Q5 is amplified by Q6, another operational amplifier with a gain of ≈ 1000. The negative output of Q6 is

compared to level determined by the setting of variable resistor R15 in comparator Q7. Normally, the output of Q7 is high enough to overcome the level at the junction of R18 and CR3 and keep switch Q2 "turned off". In the absence of a positive signal from Q5 (and consequently a negative signal from Q6), the output of Q7 falls so that the voltage at the junction of R18 and CR3 rises enough to "turn on" switch Q2 through CR2 and switch Q1 through CR3. Switch Q1 provides a ground for one side of relay K1. The other side of the K1 coil is provided with +28 VDC power through J34-H by diode CR2 or diode CR10. Figure 4.3 shows Frequency Set module A15 in a high band (H1-H4) position; +28 VDC is connected through J41-15, A15K7, and J42-A to diode CR10. In low band position (L), +28 VDC would be connected from J41-S through A15K4 and J42-C to diode CR2.

When relay K1 activates, one set of contacts provides a path to ground for the remote malfunction indicator; the second set of contacts provides +28 V through J34-D to light DRAWER MALF indicator DS15 and provide +28 V for SWEEP MALF indicator DS7.

In addition to "turning on" switches Q1 and Q2, the current through CR3 is also coupled through J34-C to J35-L (BIT #2), "turning on" inhibit switch Q18. The inhibit switch is part of the BIT priority system which pinpoints the causitive failure and ignores resultant failures. The priority system is described more completely in Paragraph 4.5.8.

4.5.5 Oscillator Malfunctions. BIT #1 assembly A4 includes two other circuits similar to the sweep malfunction circuit; these are used to detect high band and low band oscillator failures. The oscillator modules, A17 and A18, contain directional detectors to sample their RF outputs (see Figure 4.5). When the high band oscillator is activated by setting the BAND MODE switch to H1, H2, H3, or H4, detected RF from the high band oscillator is coupled through J51-T and J34-4 to the malfunction circuit comprising impedance converter Q8, amplifier Q9, and comparator Q10. In the event of a high band oscillator failure, OSC MALF indicator DS10 will light as will DRAWER MALF indicator DS6 and the remote malfunction indicator. The output of Q10 will also be coupled through CR4, J34-C, and J35-L to inhibit switch A5Q18. This is another part of the priority system that prevents the PA and LEVEL MALF indicators from lighting in the event of an oscillator failure, even though the consequent lack of RF output, and thus leveling, would normally indicate power amplifier and leveler failures too.

To prevent the low band oscillator malfunction circuit from functioning when the 506 is operating in high band, a dc level is connected to J34-8 to simulate the output of the low band detector. +28 VDC from J42-A is coupled through load resistor R112 and diodes CR6 and CR3 to ground; J34-8 is held at a constant +600 mV (the forward voltage drop across silicon diode CR3).

As Figure 4.3 shows, the low band oscillator malfunction circuitry is essentially identical to the high band circuitry.

4.5.6 Power Amplifier Malfunctions. A portion of the amplified RF output of the selected band is sampled and fed to BIT #2 assembly A5 (see Figures 4.3 and 4.5). The output from J53 is high band is fed through J35-3 to impedance converter Q1; Q1 is similar to the impedance converters already described. The output of Q1 is fed through gate Q5 to amplifier Q9. Q5 is an N-channel field-effect transistor (FET) which is normally biased "on". Gate Q6, in the low band circuitry, a P-channel FET, has been turned "off" by applying -20 VDC through pin J of connector J42 on Frequency Module A15, through relay A15K8, J42-8, J35-5, and diode CR2. The outputs of gates Q5 and Q6 are connected together, but Q6 is open. Q9 amplifies the gate output by about 1000 and applies this signal to comparator Q11 where it is compared to a pre-determined level set by variable resistor A5R36. Normally, this output is zero or slightly negative, but in the absence of an input signal, the output of Q11 rises to about +15 V.

The signal from Q11 is coupled through diode CR10 and used to "turn on" switch Q17; this provides a return path for the coil of relay A4K1 through J34-F and J35-D, and causes the DRAWER MALF and remote malfunction indicators to light. The output is also coupled through diode CR8 and used to "turn off" FET gate Q14; this is part of the priority system which prevents the LEVEL MALF indicator from lighting in the event of a power amplifier malfunction.

Finally, the output of Q11 is coupled through FET gate Q13 (normally biased "on") to switch Q15; Q15 provides a return path for PA MALF indicator DS11 through diode CR8 and J35-C, and causes the indicator to light. Only the high band indicator lights as the low band indicator, DS14, has not been provided with +28 VDC. The action when low band has been selected is similar, but the band switch signal from J42-8 is -20 V which "turns off" gate Q5 and connects only the output of low band impedance converter Q2 to the input of Q9. If switch Q15 is "turned on", current will flow through DS14 and CR13 to ground.

4.5.7 Leveling Malfunctions. The high and low band oscillator modules have similar leveling circuitry; the oscillators feed level sensing signals to J35-F (high band) or J35-H (low band). The leveling malfunction circuitry is essentially similar to that used for power amplifier malfunctions.

4.5.8 Inhibiting Circuitry. Reference has been made to a priority system, or inhibiting circuitry which allows the lamp indicating a system malfunction to light, but prevents lamps indicating consequent failures from lighting. Inhibit switch Q18 on BIT #2 board A5 can be "turned on" by any signal which will cause the SWEEP MALF indicator or either OSC MALF indicator to light. When this happens, a positive voltage is connected through diodes CR6 and CR9 to FET gates Q13 and Q14, turning the gates "off". Neither PA MALF or LEVEL MALF indicator can light in the event of a sweep or oscillator malfunction.

4.6 RESET CIRCUITRY

The malfunction reset circuitry includes part of Reset Assembly A7, front-panel PRESS TO RESET switch S6, a remote reset switch if one is used, and the internal reset circuitry of High Band Amplifier Assembly A16. Functional Block Diagram Figure 4.4 shows the reset circuitry and shows again the over-temp circuits described in Paragraph 4.5.1. Refer also to schematic diagram Figure 6.9 in Section 6.

Two types of malfunction conditions may be reset by pressing switch S6: if the internal over-current sensors in the high band amplifier have tripped, they may be reset by momentarily connecting pins F and G of connector J52 together. If SCR (silicon-controlled rectifier) Q11 has been fired by the closing of over-temp switch S7, it may be opened again by reducing the voltage between anode and cathode to zero. Figure 4.4 shows how the two halves of S6 are connected to accomplish these functions.

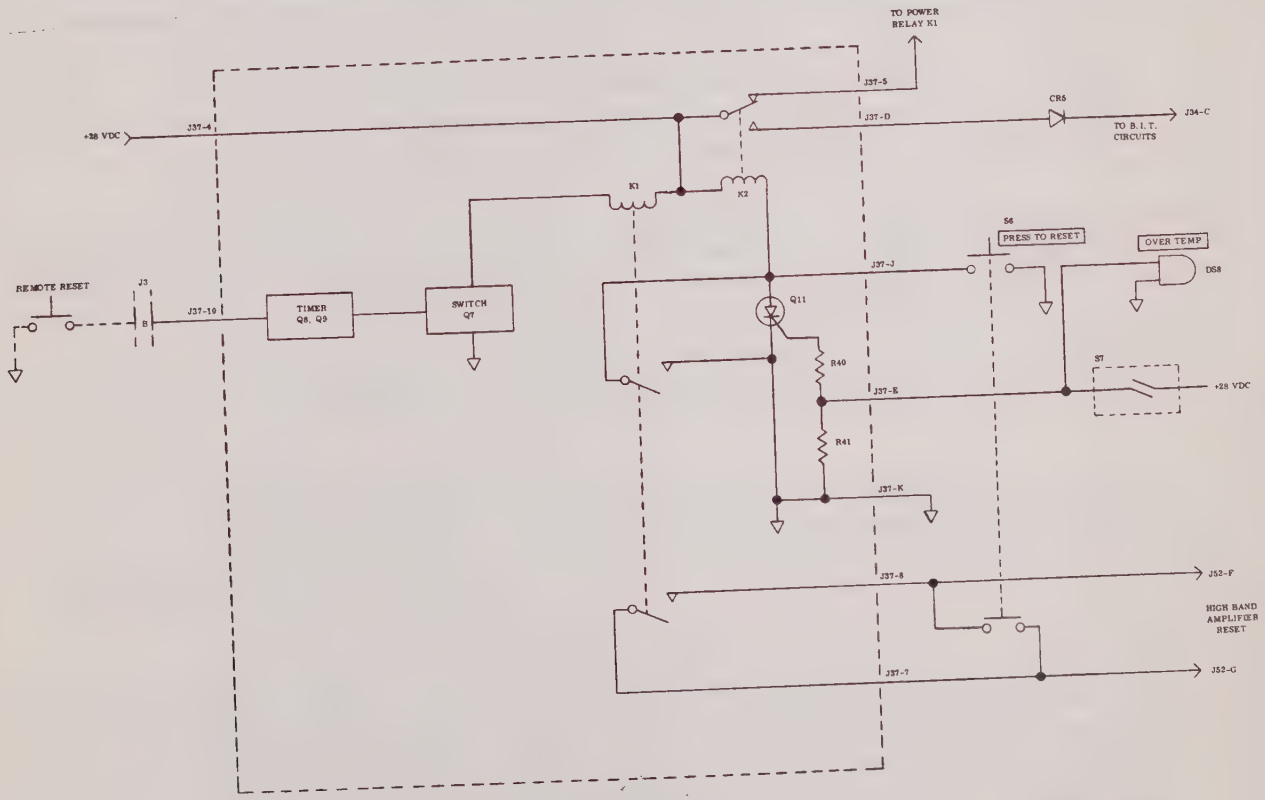

Figure 4.4 Reset Circuitry Block Diagram

Both types of malfunction conditions may also be reset remotely; when the input of timer Q8, Q9 is grounded momentarily, the timer turns on switch Q7 for a predetermined period. Q7 provides a return path for +28 VDC through the coil of relay K1. The closed contacts of K1 then perform exactly the same functions as S6.

When K1 opens (or S6 is released), SCR Q11 will be open, and relay K2 will open. This restores the unit to normal operation until Q11 is fired again by an over-temp condition.

4.7 RF CIRCUITS

4.7.1 High Band. The high band RF circuits include High Band Oscillator Assembly A17, High Band Amplifier Assembly A16, a microwave ferrite isolator, harmonic filter, a combination directional detector, and an external leveling detector. Refer to RF signal flow diagram Figure 4.5 and schematic diagrams Figures 6.1 and 6.11.

4.7.1.1 OSCILLATOR ASSEMBLY. The sealed oscillator assembly (A17) includes linearizer and amplitude modulation (AM) printed circuit board assemblies, a solid-state fundamental frequency RF source, a directional detector, and a modulator.

The operating frequency of the oscillator is determined by the voltage at pin A of connector J51, the input to the linearizer. This may be a DC voltage, as when the SWEEP SELECT switch is set to F START or F STOP, a manually-variable DC voltage (MANUAL SCAN), or a sweep ramp. In any case, the voltage is between zero and -10 V; zero corresponds to the low end of the band, and -10 V corresponds to the high end of the band. The linearizer, as the name implies, ensures that the oscillator tunes linearly with voltage.

The oscillator output is passed through a directional detector (directional coupler and crystal detector combination) to the modulator. The coupled output at -10 dB is detected and fed to the built-in-test (BIT) circuits as an indication that the oscillator output exceeds a predetermined minimum amplitude.

The modulator contains a microwave PIN diode, and functions by reducing the output of the oscillator; the modulator has a range of 40 dB. Modulator drive (PIN diode bias) comes from the AM board, which is driven by the leveling feedback from J5 and by modulating voltage from MODULATION switch S3. The leveling loop is described in Paragraph 4.7.1.4, below; the modulating circuits are described in Paragraph 4.10. Figure 4.5 also shows an output from the AM board to the BIT circuits; a zero VDC output indicates that the RF output is leveled. Finally, the modulator is used to cut off the RF output of the high band oscillator when the Signal Source is operating in low band.

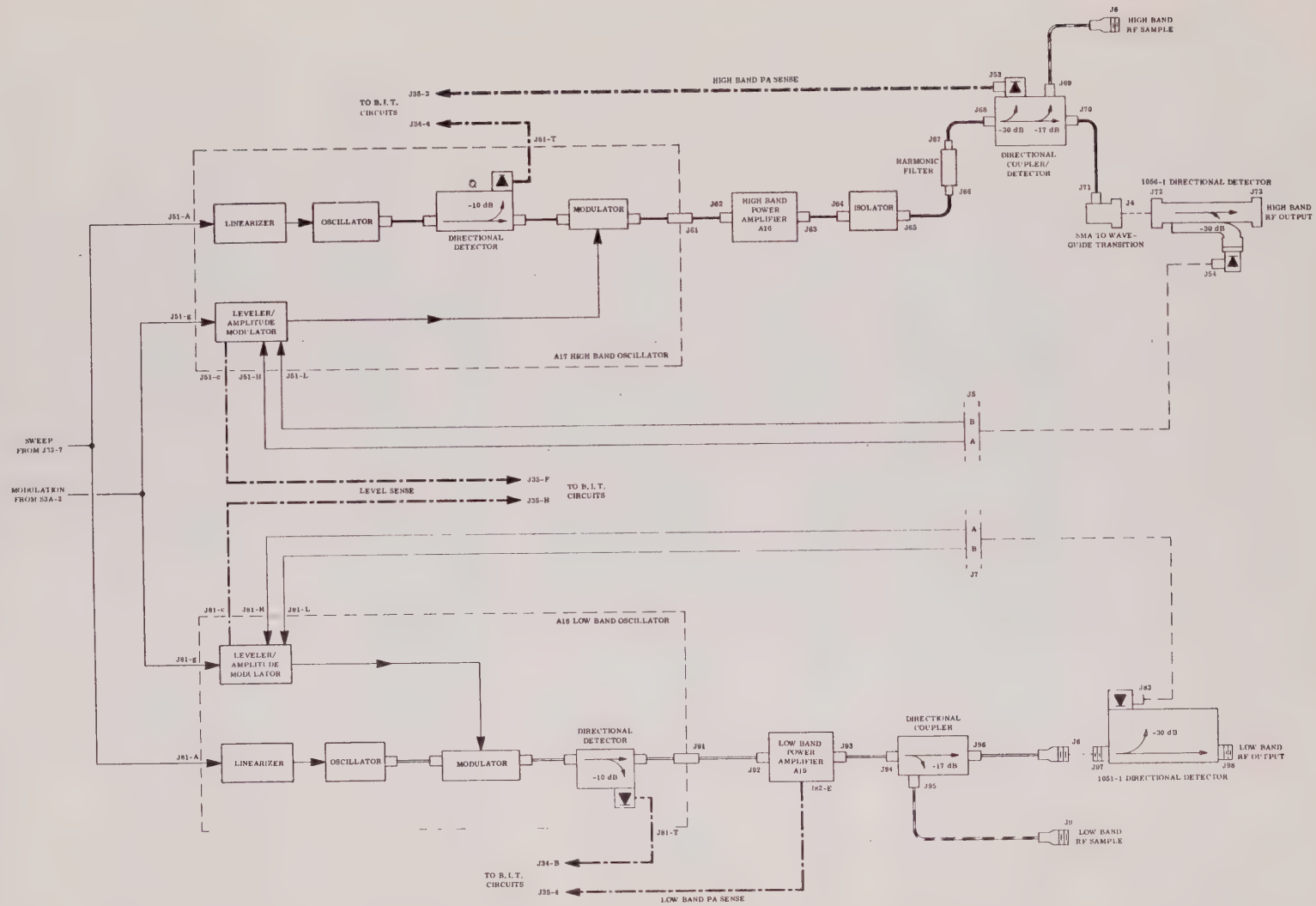

Figure 4.5 RF Signal Flow Diagram

4.7.1.2 POWER AMPLIFIER. High Band Power Amplifier Assembly A16 is also a sealed unit, completely self-contained, and requires no tuning. The amplifier is capable of delivering over 3 W, but is controlled by the leveling circuitry to deliver 1 W at J73, the output of the Model 1056-1 Directional Detector. The output of the power amplifier is fed through an isolator, which provides source and load protection by presenting constant input and output impedances, and a filter which reduces the harmonic content of the output signal to at least 20 dB below the carrier level.

4.7.1.3 DIRECTIONAL DETECTOR/COUPLER. The output of the harmonic filter is fed through this combination unit to the front-panel output connector, a transition between the Type SMA miniature coaxial connectors used inside the unit and a WR-90 waveguide flange. One coupled arm of the coupler/detector is fed at 17 dB below the main line level through J69 to connector J8, H BAND RF SAMPLE, on the rear panel. This RF output is meant to be used as a monitoring point; its output of ≤ 10 mW (+ 10 dBm) is more than sufficient to drive any frequency counter normally in use.

The second coupled output is detected and fed through J53 to the BIT circuits; if the high band power amplifier output is above a predetermined minimum level, the BIT circuits will indicate normal operation.

4.7.1.4 LEVELER. The high band RF circuits use an external leveling detector to assure optimum amplitude flatness over the entire frequency band. Waveguide of the length required by the user is connected between J4 and J72, and the RF output is taken from J73. The directional (leveling) detector should be as close to the RF load as possible. Note also that the Model 506 is specified to deliver a minimum output power of +25 dBm at J73 with 21 feet of waveguide between J4 and J72.

RF is coupled at -30 dB (0 dBm if the RF level in the main line is 1 W, +30 dBm) to the permanently-attached detector of the leveler, and fed through J5 to the AM board of the high band oscillator through J51. The leveling circuitry on this board responds to the varying input from the leveler to maintain a constant output amplitude at J73. The power output is adjustable over at least a 6 dB range by POWER ADJ INCR control R101 (also see block diagram Figure 4.9). This leveling loop holds power output variations with frequency to less than $\pm$ 0.2 dB.

4.7.1.5 POWER RELATIONSHIPS. Figure 4.6 is a chart which shows the relationships between the output levels (expressed both in terms of wattage and decibels, where zero decibels equals one milliwatt :0 dBm) at front-panel waveguide flange J4 and rear-panel coaxial connector J8. The chart shows the absolute maximum output level, normal output level, range of amplitude control, RF sample output level, and maximum output level when the high band oscillator attenuator is driven to full attenuation.

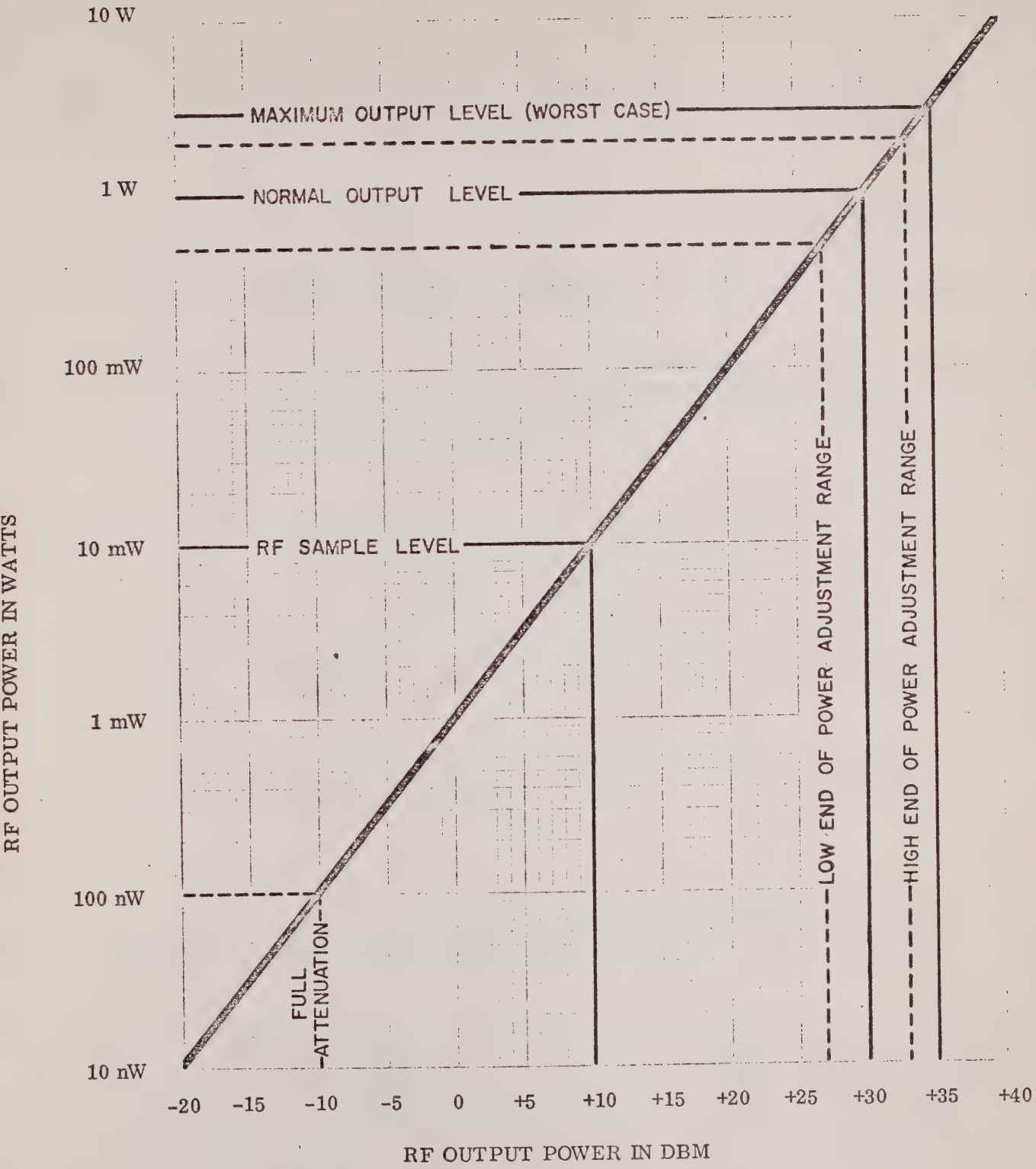

Figure 4.6 Power Relationships

4.7.2 Low Band. The low band RF circuits include Low Band Oscillator Assembly A18, Low Band Amplifier Assembly A19, a directional coupler, and an external leveling detector. Refer to signal flow diagram Figure 4.5 and schematic diagrams Figure 6.1 and 6.12.

4.7.2.1 OSCILLATOR ASSEMBLY. The sealed low band oscillator operates similarly to the high band unit described in Paragraph 4.7.1.1, and utilizes identical linearizer and AM boards. However, the low band source and modulator are a single unit, not discrete items as the high band source and modulator are. The directional detector which feeds the BIT circuits is connected after the modulator.

4.7.2.2 POWER AMPLIFIER. Low Band Power Amplifier Assembly A19, like the high band unit, is a sealed assembly containing its own power supply and requiring no tuning. The low band unit has an integral output level detector to feed the BIT circuits, and integral output filtering to assure low harmonic content.

4.7.2.3 DIRECTIONAL COUPLER. Low band RF at 17 dB below the main line level is coupled through J95 to LOW BAND RF SAMPLE connector J9 on the rear panel. The output amplitude is ≤ 10 mW (+10 dBm) when the main line amplitude is 1 W (+30 dBm); the most common use for this output is to drive a frequency counter.

4.7.2.4 LEVELER. The low band leveling circuitry is similar to the high band circuitry described in Paragraph 4.7.1.4, but uses coaxial (Type N) components rather than waveguide. Operating levels and specifications are identical to the high band equivalents.

4.7.2.5 POWER RELATIONSHIPS. The power relationships shown in Figure 4.6 and described in Paragraph 4.7.1.5 hold for the low band as well as the high band RF circuitry.

4.8 SWEEP CIRCUITS

The sweep circuitry of a Model 506 Microwave Signal Source comprises printed circuit assemblies A2 (Trigger Sweep), A3 (Operational Amplifier), A6 (Trigger Holdoff), and the components in the SWEEP MODE section of the front panel.

The sweep circuits provide frequency-determining voltage to the low and high band RF oscillators (refer back to Figure 4.5). The maximum range of this voltage is zero to -10 V. Frequency-determining voltage may be introduced as a negative-going ramp, a positive-going ramp, a manually-controlled DC voltage, or a fixed DC voltage. The RF oscillator frequency increases with increasing negative voltage, and decreases with decreasing negative voltage; 0 V corresponds to the low-frequency end of the specified band, and -10 V corresponds to the high-frequency end of the band.

Therefore, it is possible to tune up-scale (negative-going ramp) or down-scale (positive-going ramp) in any of the sweeping positions of the front-panel SWEEP SELECT switch -.1, 1, or 10 SECONDS - to tune manually with a front-panel control - MANUAL SCAN - or to tune to a fixed frequency with a fixed DC voltage - F START and F STOP.

4.8.1 Ramp Generator. The ramp generator comprises boards A2 and A6, SWEEP MODE TRIGGER switch S4, MANUAL SCAN/VERNIER control R105, MANUAL TRIGGER switch S5, and three sections of SWEEP SELECT switch S2. Board A6 contains the trigger holdoff circuits, the quieting circuits, and the timing capacitors for sweep-speed selection. Board A2 contains the sweep ramp generator. Figure 4.7 is a block diagram of the ramp generator; as the waveform shows, the output of the ramp generator is always a 0 V to +10 V ramp.

4.8.1.1 TRIGGER HOLDOFF. Trigger holdoff circuits on A6 prevent manual, external, or line-frequency sweep-triggering signals from reaching TRIGGER switch S4 during the time that a ramp is being generated; this prevents double triggering, or re-initiation of sweep. Sweep comparator Q2 samples the sweep ramp from J32-5 and biases FET gates Q3 and Q4 "on" through diodes CR8 and CR2 whenever the ramp signal is at any level other than 0 V (the exact level is adjusted by R9).

Normally, manual trigger pulses from switch S5 or external trigger pulses from rear-panel connector J12 (differentiated by capacitor C5) are coupled through non-inverting impedance converter Q1 to switch S4 as shown in Figure 4.7. Q1 provides isolation between the trigger source and the sweep trigger circuits. However, when gate Q3 has been "turned on" by sweep comparator Q2, the output of Q1 is short-circuited to ground, and does not pass any manual or external trigger pulses to section A of switch S4.

The line-frequency square wave from the power supply is normally differentiated by capacitor C13; the resulting pulses are fed through J36-1 to section B of switch S4. The line trigger reference is short-circuited to ground, however, when gate Q4 has been "turned on" by Q2.

4.8.1.2 SWEEP TRIGGER. Figure 4.7 shows SWEEP MODE TRIGGER switch S4 at AUTO; when S4 is set to EXT/MAN, such pulses are coupled through sections A and B to J32-2. The trigger pulse generator on A2 responds only to positive input signals; diode CR2 short-circuits any negative inputs to ground. This feature is important when S4 is set to LINE; the trigger pulse generator will respond only to the positive-going pulse differentiated by capacitor C13 on A6 (this corresponds to the positive-going portion of the square wave). Such an arrangement ensures that each new sweep is not only synchronized with line frequency, but is in phase with the start of the preceeding sweep.

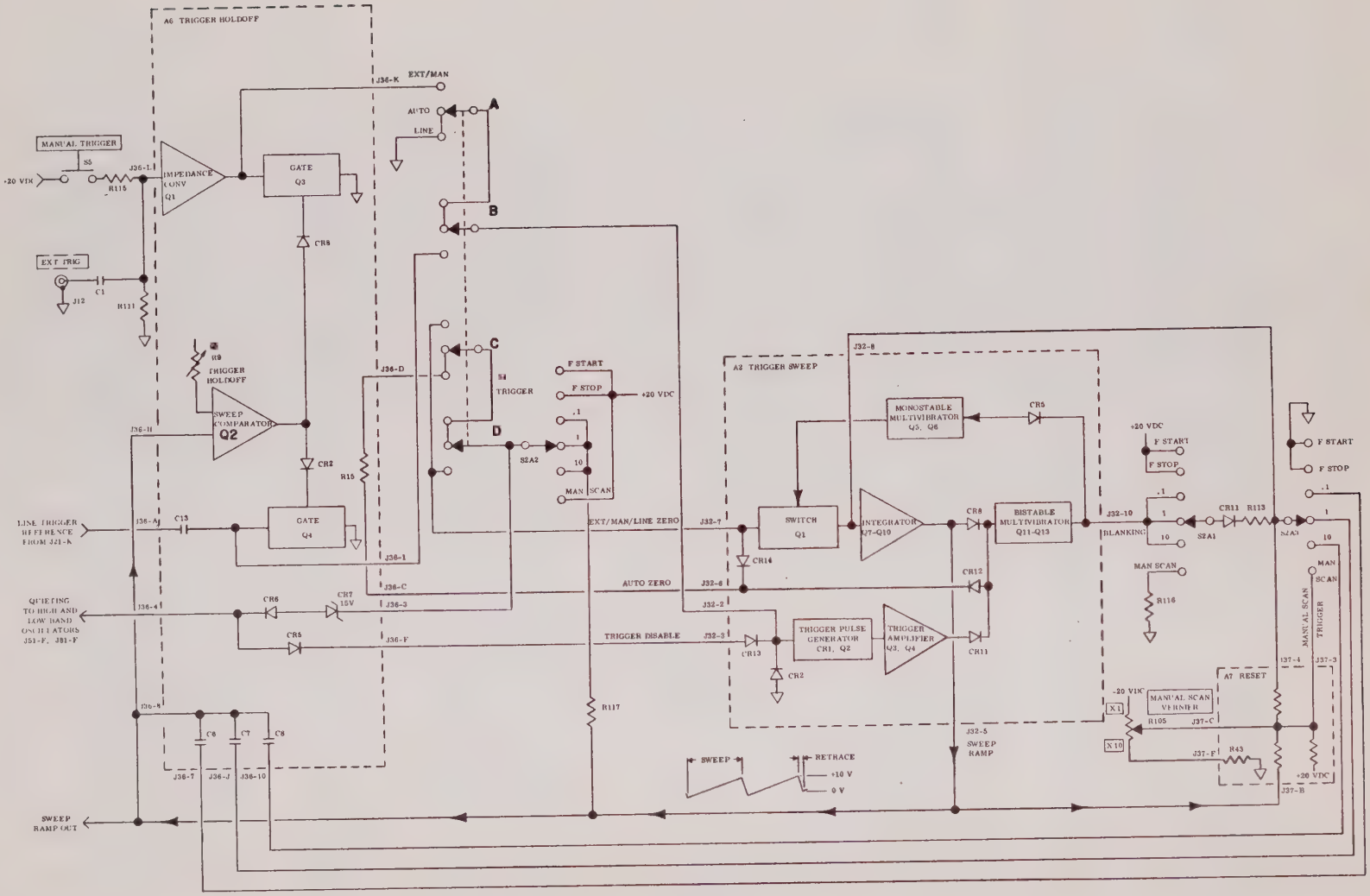

Figure 4.7 Ramp Generator Block Diagram

Each positive pulse causes tunnel diode CR1 to fire once; the fast-rising pulse from CR1 and Q1 is amplified by the trigger amplifier composed of Q3 and Q4. Diode CR11 couples the positive-going pulse to the input of bistable multivibrator (flip-flop) Q11-Q13. The function of the flip-flop is detailed in Paragraph 4.8.1.5 below.

4.8.1.3 SWEEP TRIGGER DISABLE. Trigger pulse generator CR1, Q2 is disabled when switch S4 is set to AUTO; the input (cathode of CR2) is connected to ground through J32-2 and sections A and B of S4.

The sweep trigger circuit is disabled by another method when the Signal Source is functioning in a non-sweeping mode. When SWEEP SELECT switch S2 is set to F START, F STOP, or MANUAL SCAN, +20 V power is connected through section A2 of S2 and J36-3 to Zener diode CR7 on board A6. The voltage drop across CR7 is 15 V; the remaining 5 V is coupled through CR6, CR5, J36-F, J32-3, and CR13 to the trigger pulse generator. These three silicon diodes in series drop the voltage another 1.8 V, making the level at the cathode of CR13 + 3.2 V. A level of +1.5 to +5 V at the trigger pulse generator causes one trigger pulse to be coupled to the bistable multivibrator at the moment the SWEEP SELECT switch is moved to one of the non-sweeping positions. This is the desired effect, as it causes the multivibrator to reset even if the switch is moved during a sweep. Additionally, the +3.2 V at its input locks out the trigger pulse generator even if manual, external, or line triggers are received through S4.

Further, switch Q1 and integrator Q7-Q10 on A2 are disabled in non-sweeping modes of operation: +20 V is connected through S2A2 and sections C and D of S4 to J32-7 (EXTERNAL/MANUAL or LINE) or through J36-D, R15, J36-C, and J32-6 (AUTO). When S2 is set to one of the three sweeping positions (.1, 1, or 10), a portion of the sweep ramp output is fed back through one of these same paths to establish a zero reference for the sweep ramp.

Finally, the trigger input of the integrator (J32-8) is held at ground potential through S2A3 in F Start and F Stop. This, too, prevents sweep by preventing integration. Operational theory of the integrator is found in Paragraph 4.8.1.5.

4.8.1.4 QUIETING. A quieting signal at +4.4 V (+20 V through CR7 and CR6) is connected to the quieting inputs of the high and low band oscillators when a non-sweeping mode is selected. The net effect of this +4.4 VDC signal is to activate certain internal circuitry of the oscillators that reduces the bandwidth of the frequency-tuning circuits. Consequently, residual FM (frequency changes caused by electrostatic and electromagnetic pickup in the frequency-determining circuits) is quite low in F Start, F Stop, and Manual Scan modes.

4.8.1.5 INTEGRATION LOOP. To aid in understanding the integration loop, assume the following: switches S4 and S2 are set as shown in Figure 4.7 (S4 at AUTO, S2 at 1 SECOND) and variable resistor R105 is set to X 1. The voltage at the input of integrator Q7-Q10 is zero, the previous sweep having just ended. The output of bistable multivibrator Q11-Q13 is high, +18 V.

Note that capacitor C7 on board A6 is connected across Miller integrator Q7-Q10 through J32-8, S2A3, J36-J, J36-8, and J32-5. The +18 V output of the bistable multivibrator is coupled through J32-10 and S2A1, triggering the integrator through CR11 and R113. The integration time with the 1μF timing capacitor C7 is 1 S. This time can be extended, all the way to 10 S by adjusting VERNIER control R105 to X 10, thus modifying the charging rate. As soon as the integrator begins to charge, the bistable multivibrator is triggered to change state through diode CR8 (Auto) or CR11 (External, Manual, or Line).

Certain diode biases are designed so that when the integration process is completed, that is the ramp has reached the +10 V level, the capacitor discharges (or integrates downward) at a rate 10 times as fast as the basic charging rate. As C7, the 1 S capacitor is being used, the downward integration time is 100 mS. This is true even if the basic charging rate has been modified to 10 S with the VERNIER control.

As soon as the downward integration begins, multivibrator Q11-Q13 changes state again; the output changes from 0 V to +18 V. This change of state, in turn, triggers monostable (delay) multivibrator Q5, Q6 and would trigger Q7-Q10 to begin integration again. However, switch Q1 short-circuits the integrator for a fixed 3 mS period. Consequently, the ramp stays at the 0 V level for 3 mS after it is reached, then Q1 is "turned off", and the integration process is allowed to begin again.

If the TRIGGER switch is not at AUTO, but EXTERNAL/MANUAL, Q1 stays "on" until a trigger is received through J32-3. If S4 is at LINE, Q1 stays "on" until a positive pulse is received through J32-3.

4.8.1.6 MANUAL SCAN. When switch S2 is set to MANUAL SCAN, a trigger (DC level) is provided the integrator through S2A3. The voltage level from MANUAL SCAN control R105 determines the operating level, between 0 V and +10 V, of the integrator.

4.8.2 Operational Amplifier. As already described, the output of the ramp generator is always a 0V to +10 V ramp, but the RF oscillators must be tuned with a 0 V to -10 V ramp. The operational amplifier, board A3, inverts the ramp and sums the outputs of Frequency Set Assembly A15. Refer to block diagram Figure 4.8 and schematic diagram Figure 6.5.

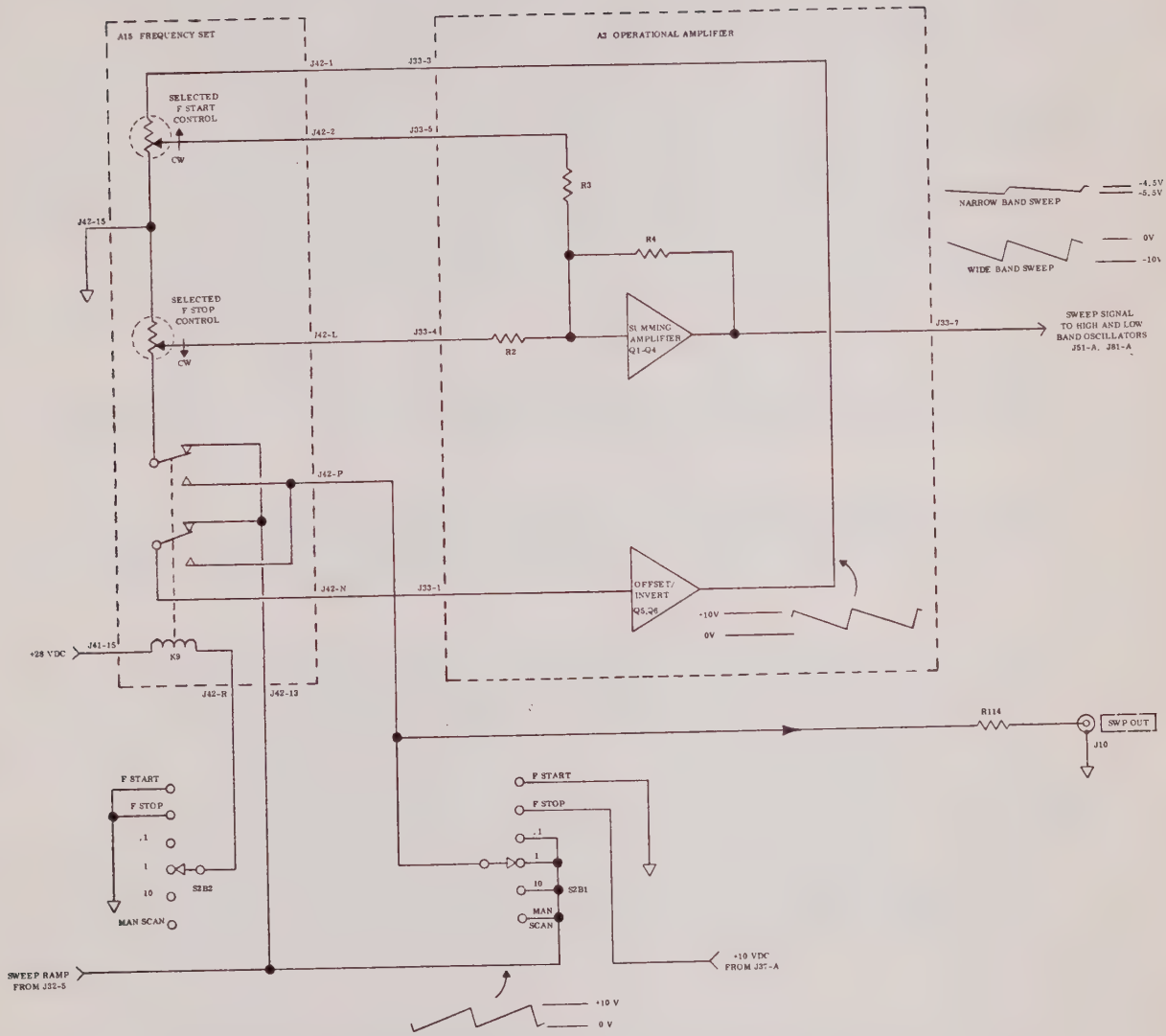

Figure 4.8 Operational Amplifier Block Diagram

4.8.2.1 SWEEPING. When switch S2 is set to any of the three sweeping positions or to scan manually, the sweep ramp (or DC level) from the entegrator output, J32-5, is coupled through S2B1 to the rear-panel SWP OUT connector J10 through isolation resistor R114. The sweep ramp is also connected through the normally-open contacts of relay K9 on A15 to the F Stop control selected by the position of the BAND MODE switch. The sweep ramp is also connected to the input of unity-gain offsetting and inverting amplifier Q5, Q6. The ramp is inverted and offset, so that upward integration begins at +10 V and downward integration begins at 0 V. This ramp is fed to the selected F Start control on A15. The positions of the F Start and F Stop controls determines what portions of the 0 to +10 V and +10 to 0 V ramps summed together in amplifier Q1-Q4. The normal positions of the controls for a full-band sweep would be F Start fully CCW (low end of band) and F Stop fully CW (high end of band). This would result in a 0 V input through R3, and the full 0 to -10 V ramp voltage through R2. The summing amplifier inverts this to a 0 to -10 ramp which drives the high and low band oscillators.

If the F Start control is set to maximum CW and the F Stop control to maximum CCW, the resulting output is a =10 to 0 V ramp; the oscillators will sweep from the high to the low end of the band.

Any portion of the selected band may be swept by setting the appropriate F Start and F Stop controls. The summing amplifier simply adds algebraically the two complementary F Start and F Stop voltages.

4.8.2.2 F START/F STOP. When the SWEEP SELECT switch is set to F START or F STOP, relay K9 is activated through S2B2. In F Start, SWP OUT connector J10 is connected to ground through R114, and the input of Q5, Q6 as well as the selected F Stop control are connected to ground through the closed normally-open contacts of K9. The output of Q5, Q6 is inverted and offset to +10 V; the F Start control delivers a portion of the DC level to summing amplifier Q1-Q4. This 0 V to +10 V level is added to the 0 V signal from the F Stop control (note that both ends are connected to ground). The summed output to the oscillators is a negative voltage of the same value as the positive voltage from the F Start control. When the unit is again operated in a sweeping mode, the fixed frequency thus generated will be the same as the starting frequency of the sweep.

F Stop operation is similar, but the polarities are reversed. When S2 is at F STOP, +10 VDC from the regulator on board A7 is connected through S2B1 and K9 to Q5, Q6 and to the selected F Stop control. The summed output to the oscillators is a negative voltage of the same value as the positive voltage from the F Stop control. The fixed frequency thus generated will correspond to the end-of-sweep frequency.

4.9 FREQUENCY SET CIRCUITS

Frequency Set Assembly A15 is part of the control circuitry for the Model 506; the primary function of A15 is to switch between sets of F Start and F Stop potentiometers for the five operating bands. In addition, however, the assembly controls the low and high band oscillators and power amplifiers, and the BIT circuits. Refer to schematic diagrams Figure 6.2 and Figure 6.10.

4.9.1 High Band Frequency Set Circuits. Figure 4.9 is a simplified schematic diagram of A15 and its external connections when the BAND MODE switch has been set to one of the high band frequency ranges, H1 in this case.

4.9.1.1 REMOTE RF ON. Pin G of rear-panel connector J3 must be grounded externally if the Signal Source is to operate. This allows 28 VDC power from 28 V buss #2 (refer to Paragraph 4.3 and Figure 4.1) to activate relay K10 which connects +28 V to one side of relays K1 through K5. Figure 4.9 shows only K5 of these five relays.

4.9.1.2 STATUS READY INDICATOR. Indicator DS6 connects to 28 V buss #2 through the closed contacts of K10 and to gate Q1 (Refer to Paragraph 4.5.3 and to block diagram Figure 4.3). If DRAWER MALF indicator DS15 is not lighted to indicate a malfunction, DS6 will light to indicate that the 506 is ready to be operated.

4.9.1.3 BANDSWITCH. Relay K8 does not activate when a high band frequency range has been selected. The normally-closed contacts of K8 connect -20 V power through J42-J and J42-8 to J35-5; this turns on certain gates in the BIT circuits (refer to Paragraph 4.5).

4.9.1.4 LOW BAND POWER CONTROL. A second set of normally-closed K8 contacts short-circuits the wiper of low band POWER ADJ INCR control R102 to ground through J42-H and J42-6. The net result is to bias the modulator inside the sealed oscillator assembly to its highest possible attenuation, reducing the oscillator RF output to minimum.

4.9.1.5 BAND SELECTION. BAND MODE switch S1A3 is shown at H1; this allows relay K5 to be activated. +28 VDC from buss #2 is also coupled through J41-S and part of K5 to activate relay K7; one set of K7 contacts connects +28 V buss #2 to J42-A, the source of the " +28 VDC high band" signal used by the BIT circuits. The second set of K7 contacts open the path between the wiper of high band POWER ADJ INCR control R101 and ground, allowing this control to function normally.

4.9.1.6 POWER AMPLIFIER. The high band power amplifier is enabled by connecting pins E and K of connector J52 together; this function is performed by a set of relay K5 contacts through J42-S and J42-14. The high band amplifier, although connected to a power source, will not operate without this external connection.

4.9.1.7 FREQUENCY CONTROL. The remaining four sets of K5 contacts are used to select variable resistors R15 and R20, respectively, as the F Start and F Stop controls for band H1. The operation of these controls was detailed in Paragraph 4.8.2.

4.9.1.8 REMOTE CONTROL. If switch S1A3 were set to REMOTE rather than H1, relay K6 would be activated. It would then be necessary to provide a path to ground for pin D of connector J3 in order to activate K5 and select band H1.

4.9.1.9 SWEEP. Relay K9 is shown in a de-activated position, which is true if the SWEEP SELECT switch is set to the .1, 1, or 10 S positions or manual scan position. Relay K9 activates when the switch is set to the F Start or F Stop positions (refer to Paragraph 4.8.2.2).

4.9.2 Low Band Frequency Set Circuits. Figure 4.10 shows a simplified schematic diagram of the same module, A15, when the BAND MODE switch has been set to L. Remote RF on and status ready functions are identical to the high band equivalents. The bandswitch connects +20 V power to J35-5 instead of -20 V power, and high band power adjust control R101 is short-circuited instead of R102. Note that the low band power amplifier is enabled through J42-D and J42-E. Comparison of Figures 4.10 and 4.9 will demonstrate the differences between high and low band operation of the frequency set circuits.

4.10 MODULATION CIRCUITS

The modulation circuits of the Model 506 include MODULATION switch S3, PERCENT control R104, and part of Printed Circuit Assembly A7. The modulation circuits provide a 1 kHz square wave (or an externally-supplied signal) to the AM boards in the high and low band oscillator assemblies. Figure 4.11 is a block diagram of the modulation circuits; also refer to schematic diagrams Figure 6.2 and 6.9 in Section 6.

When front-panel MODULATION switch S3 is set to OFF, all three sections of the switch are open-circuited, as Figure 4.11 shows. When the switch is set to INTERNAL, -20 V power is connected to the 1 kHz oscillator on board A7 through S3A1 and connector J37, pin 1. Frequency-control voltage from A7R16 allows the square wave to be adjusted from approximately 950 to 1050 Hz; it is factory-set for 1000 Hz, the frequency to which most commonly-used VSWR indicators are tuned.

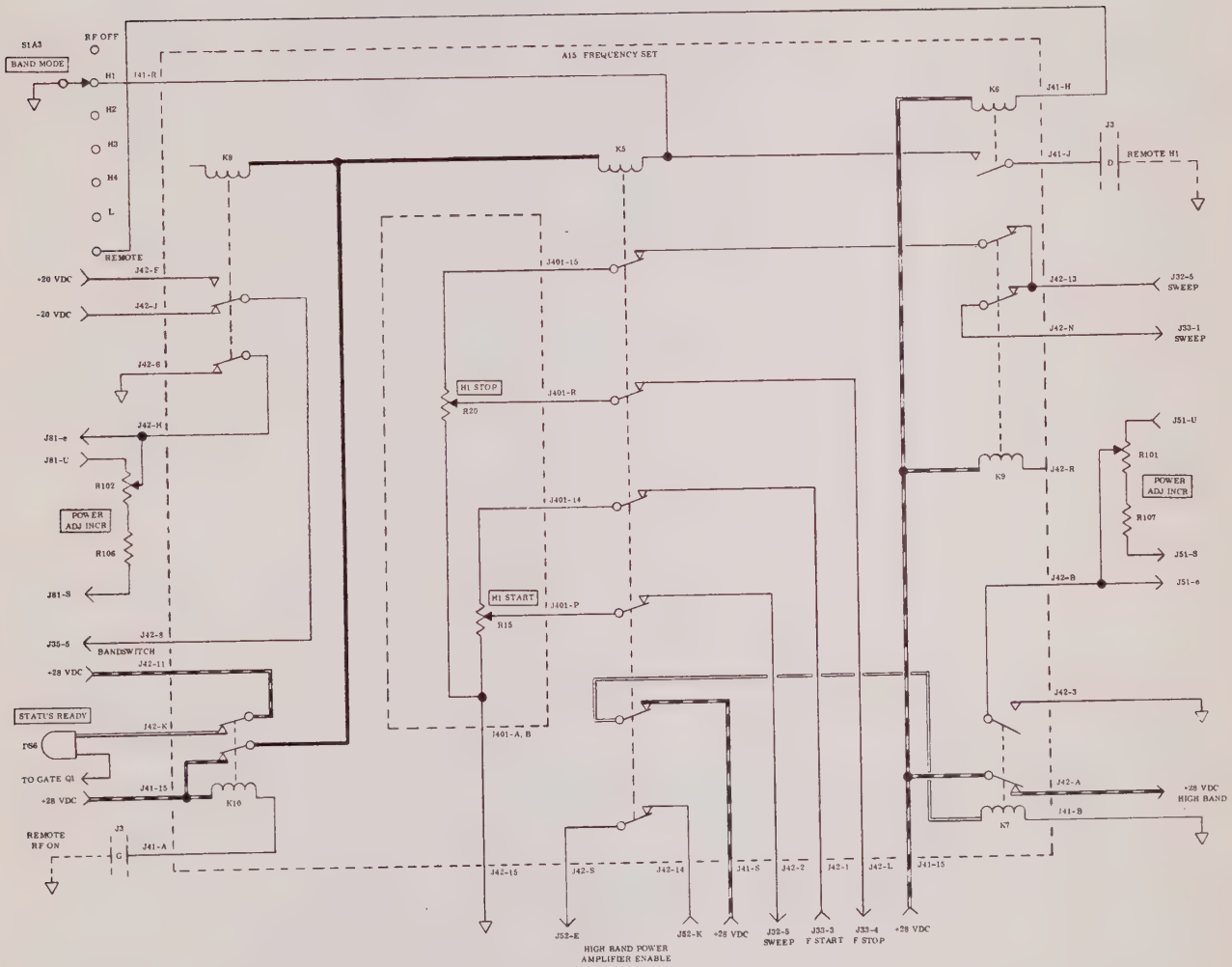

Figure 4.9 Frequency Set Circuits Simplified Schematic Diagram (High Band)

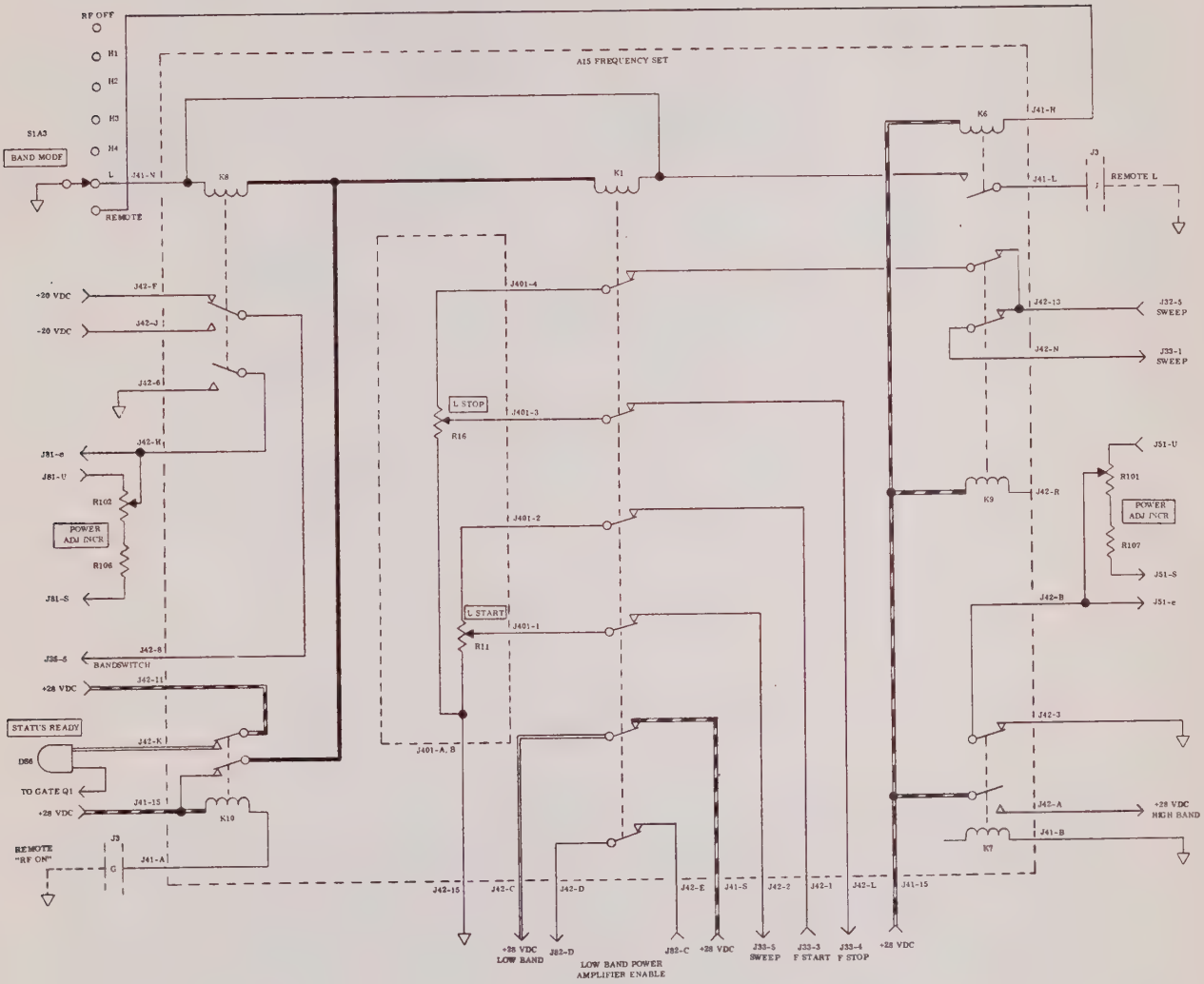

Figure 4.10 Frequency Set Circuits Simplified Schematic Diagram (Low Band)

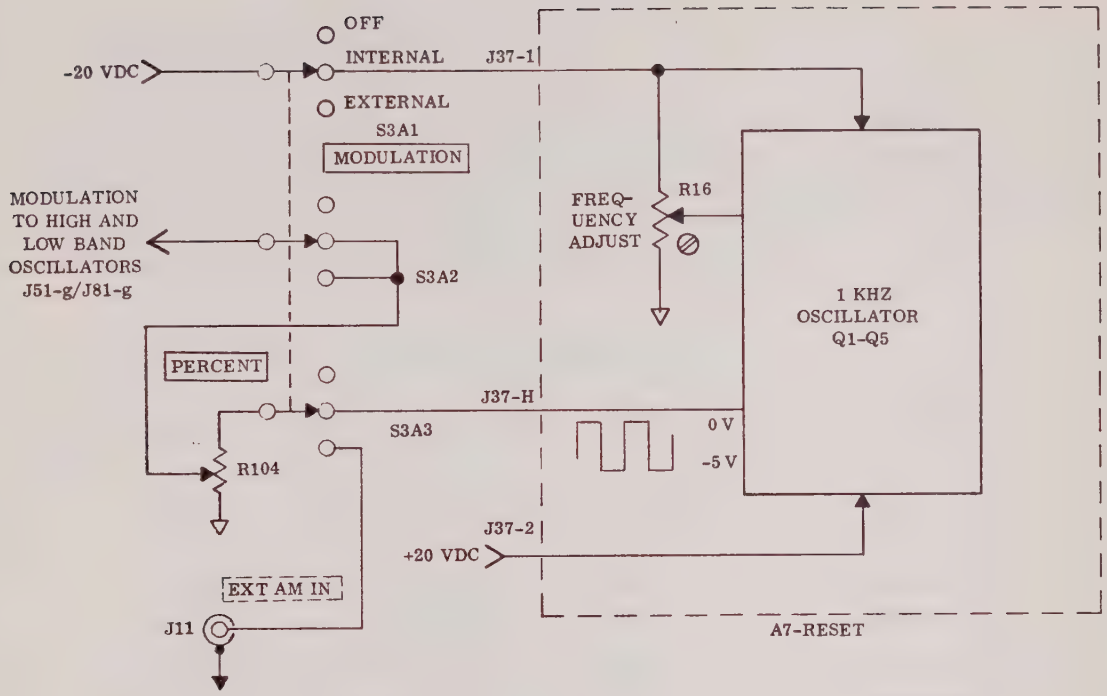

Figure 4.11 Modulation Circuits Block Diagram

The negative-going (0 to -5 V) output signal is coupled through J37-H and section A3 of switch S3 to variable resistor R104, the PERCENT control. The setting of this control determines the amplitude of the signal coupled through S3A2 to the high and low band oscillator assemblies. The oscillator AM boards respond to the negative-going input by increasing the drive to their internal modulators, thereby reducing the RF output of the oscillator modules. Assume the PERCENT control to be set at 100; the 0 V portion of the square wave signal will have no effect on the output of the oscillator. The output amplitude will be determined by the setting of the POWER ADJ INCR control and the feedback from the external leveling (directional) detector. At the next half-cycle of the square wave, the level changes to -5 V. The total effect will be to decrease the RF output of the oscillator by at least 40 dB from its maximum (full-on) level.

External inputs connected to J11 on the rear panel are coupled through S3A3, R104, and S3A2 to the high and low band oscillators when S3 is set to EXTERNAL. Any external inputs must be AC-coupled or negative-going. This input may also be used for external power control; the sensitivity is 100 mV per mW. Such use is not recommended, however, as the built-in leveling loop of the 506 operates with much greater precision than an external setup would probably feature.

SECTION 5

MAINTENANCE

5.1 MAINTENANCE PHILOSOPHY

The 506 Microwave Signal Source has been designed for maximum reliability, minimum down-time, and ease of repair. To this end, all modules are easily removed and replaced in the event of failure. Table 5.1 lists the replaceable modules and indicates the recommended level of repair. Table 5.2 lists the recommended quantity and type of replacement modules to be stocked for each Signal Source.

Table 5.1 Module Repair

MODULE	PART NO.	ITEM	REPAIR LEVEL
A2	950455	Trigger Sweep P.C. Assembly	Factory (recommended) or Depot
A3	950456	Operational Amplifier P.C. Assembly	Factory (recommended) or Depot
A4	950473	BIT #1 P.C. Assembly	Factory (recommended) or Depot
A5	950472	BIT #2 P.C. Assembly	Factory (recommended) or Depot
A6	950471	Trigger Holdoff P.C. Assembly	Factory (recommended) or Depot
A7	950470	Reset P.C. Assembly	Factory (recommended) or Depot
A8	950457	Regulator P.C. Assembly	Factory (recommended) or Depot[2]
A9	950479	Extender P.C. Assembly	Not Repairable[4]
A15	962106	Frequency Set Assembly	Factory Repair Only [1]
A16	962077	High Band Power Amplifier	Factory Repair Only[1]
A17	962103	High Band Oscillator Assembly	Factory Repair Only [1]
A18	962104	Low Band Oscillator Assembly	Factory Repair Only [1]
A19	962078	Low Band Power Amplifier	Factory Repair Only [1]
A20	962105	Power Supply	Factory Repair Only [1,3]
	948296	RF cable, High Band Oscillator to High Band Amplifier	Not Repairable

	948301	RF cable, Low Band Oscillator to Low Band Amplifier	Not Repairable
	34-03	High Band Isolator Assembly	Not Repairable
1060-3	948288	High Band Directional Detector/Coupler	Not Repairable
1060-2	948287		
1060-2	948287	Low Band Directional Coupler	Not Repairable
	962080	High Band Harmonic Filter	Not Repairable
	34-02	SMA to Waveguide Transition	Not Repairable
1056-1	962089	High Band Directional Detector (Leveler)	Not Repairable
1051-1	962084	Low Band Directional Detector (Leveler)	Not Repairable

NOTES:

1) Sealed Unit. Attempted disassembly will void warranty and probably cause increased damage to malfunctioning units.
2) Return A8 to factory when A20 Power Supply is returned for repair.
3) Board A8 may be depot repaired; remainder of assembly is sealed.
4) Board A9 is field repairable; to assure maximum reliability, it should be replaced if damaged.
5) Other items not listed are not repairable, and should be replaced if malfunctioning.

Table 5.2 Recommended Spares

MODULE	PART NO.	ITEM	SPARE QUANTITY	506 UNITS COVERED
A2	950455	Trigger Sweep P.C. Assembly	1	2
A3	950456	Operational Amplifier P.C. Assembly	1	2
A4	950473	BIT #1 P.C. Assembly	1	2
A5	950472	BIT #2 P.C. Assembly	1	2
A6	950471	Trigger Holdoff P.C. Assembly	1	2

A7	950470	Reset P.C. Assembly	1	2
A8	950457	Regulator P.C. Assembly[1]	1	2
A9	950479	Extender P.C. Assembly	1	5
A15	962106	Frequency Set Assembly	1	2
A16	962077	High Band Power Amplifier	1	1
A17	962103	High Band Oscillator Assembly	1	2
A18	962104	Low Band Oscillator Assembly	1	2
A19	962078	Low Band Power Amplifier	1	2
A20	962105	Power Supply	1	2
	948296	RF cable, High Band Oscillator to Amplifier	1	4
	948301	RF cable, Low Band Oscillator to Amplifier	1	4
	34-03	High Band Isolator Assembly	1	4
1060-3	948288	High Band Directional Detector/Coupler	1	4
1060-2	948287	Low Band Directional Coupler	1	4
	962080	High Band Harmonic Filter	1	4
	34-02	SMA to Waveguide Transition	1	4
	1056-1	High Band Directional Detector (Leveler)	1	4
	1051-1	Low Band Directional Detector (Leveler)	1	4
	51-02	Circuit Breaker Switch CB1	1	3
	51-03	Circuit Breaker Switch CB2	1	3
	51-01	Circuit Breaker Switch CB3	1	3

51-01	Circuit Breaker Switch CB4	1	3
51-01	Circuit Breaker Switch CB5	1	3
51-04	Running Time Meter M1	1	3
39-08	Lamp, #387	6	1
45-03	Relay K1	1	2
45-04	Relay K2	1	2
53-01	Temperature Switch S7	1	2
21-08	AC Power Connector J1	1	4
21-09	DC Power Connector J2	1	4
21-18	Remote Connector J3	1	4
47-06	Power Adjustment Control R101, R102	1	1
51-05	Band Mode Switch Assembly S1	1	3
51-07	Sweep Select Switch Assembly S2	1	3
51-08	Modulation Switch Assembly S3	1	3
51-09	Trigger Switch S4	1	3
51-10	Manual Pushbutton Switch S5	1	3
39-01	115 VAC 60 Hz Indicator DS1	1	3
39-06	28 VDC Indicator DS2	1	3
39-02	ON Indicator DS3-DS5	1	1
39-03	READY Indicator DS6	1	3
39-04	MALF Indicator DS7, DS9-DS14	2	1

39-07	OVER TEMP Indicator DS8	1	3
39-05	PRESS TO RESET Switch and Indicator S6	1	3
21-06	Level Connector J5	1	2
21-07	Level Connector J7	1	2
21-19	N Connector J6, J8, J9	2	3
47-05	Vernier Control, Modulation Control R104, R105	1	1

NOTES:

1) Included with Power Supply A20

5.2 ROUTINE MAINTENANCE

The 506 Signal Source is a rugged instrument, and under normal circumstances should require no routine maintenance other than the 180-day calibration procedure detailed in Paragraph 5.3. When the unit is operated in other than a laboratory environment, the instrument should be inspected and cleaned as part of the calibration procedure:

a. Turn all power off.

b. Remove connectors P1, P2, and P3 from the rear panel. Inspect the chassis connectors and mating connectors for damage, wear, or dirt.

c. Remove the top and bottom covers; each is held in place with 26 screws.

d. Remove any accumulated dust or other foreign matter with a soft brush and low-pressure dry air.

e. Inspect the entire unit carefully for loose screws, nuts, coaxial and power connectors, etc. Tighten any hardware requiring it.

f. Check the unit carefully for damaged or overheated components, pieces of solder or wire, frayed wire insulation, etc.

g. Inspect each printed circuit assembly carefully for damaged or overheated components, loss of conformal coating integrity, etc. Replace each card after inspection.

h. Remove any grease, oil, or corrosion that may be present on the contacts of any card cage connectors.

i. Replace the covers removed in step c (unless calibration is to be performed). Re-attach P1, P2, and P3.

j. Inspect the front-panel knobs to be sure they are tight; check the condition of the gasket supplied with waveguide flange J4.

5.3 CALIBRATION

The following calibration procedure should be performed every 180 days; generally, routine maintenance (Paragraph 5.2) should precede calibration. The appropriate calibration procedure(s) should be performed when a module is replaced. Table 5.3 lists these procedures.

Table 5.3 Calibration Procedures after Module Replacement

MODULE	NOMENCLATURE	CALIBRATION PROCEDURE PARAGRAPH			
		5.3.3	5.3.4	5.3.5	5.3.6
A2	Trigger Sweep P.C. Assembly	X		X	
A3	Operational Amplifier P.C. Assembly	X		X	
A4	BIT #1 P.C. Assembly	X	X		
A5	BIT #2 P.C. Assembly	X	X		
A6	Trigger Holdoff P.C. Assembly			X	
A7	Reset P.C. Assembly				X
A8	Regulator P.C. Assembly	X	X	X	X
A9	Extender P.C. Assembly				
A15	Frequency Set P.C. Assembly	X			
A16	High Band Power Amplifier		X		
A17	High Band Oscillator Assembly	X			
A18	Low Band Oscillator Assembly	X			
A19	Low Band Power Amplifier		X		
A20	Power Supply	X	X	X	X
1060-3	High Band Directional Detector/ Coupler		X		
1056-1	High Band Directional Detector (Leveler)		X		
1051-1	Low Band Directional Detector (Leveler)		X		

Figure 5.1 shows the location of the calibration adjustments. Before calibration, remove the top cover and turn on all circuit breaker switches. Allow the unit to run for 10 minutes.

5.3.1 Printed Circuit Assembly A2, Trigger Sweep. Resistor A2R28 (coarse adjustment for end-of-sweep voltage) and A2R29 (fine adjustment for end-of-sweep voltage) are selected fixed resistors. Adjustments in these values may only be made at the factory.

5.3.2 Printed Circuit Assembly A3, Operational Amplifier. A3 contains no adjustments.

5.3.3 Printed Circuit Assembly A4, Built-in-Test #1. A4 contains three adjustments:

a. Variable resistor A4R15, sweep malfunction sensitivity adjustment. Set SWEEP SELECT switch to 10 SECONDS, vernier to X10, and TRIGGER switch to EXTERNAL/MANUAL. Set MODULATION switch to OFF and BAND MODE switch to RF OFF. Observe sweep ramp output at rear panel connector J10 with an oscilloscope. Determine that the sweep ramp is at zero (not sweeping), and adjust R15 so that the SWEEP MALF indicator lights. Press the MANUAL pushbutton and determine that the indicator goes out by the time the sweep ramp voltage is at $\approx$ 60 mV. Check the setting of R15 at the 1 and .1S sweep positions. Set the TRIGGER switch to AUTO; determine that the SWEEP MALF indicator does not light at any sweep speed.

b. Variable resistor A4R37, high band oscillator malfunction sensitivity adjustment. Set the SWEEP SELECT switch to .1 SECONDS, vernier at X1. Set the BAND MODE switch to H1 and sweep the entire band. Be sure the leveling detector is installed properly. Adjust the front-panel POWER ADJ INCR control (R101) fully CCW for minimum power output. Check the output of the leveling detector with a power meter to determine that it is $\approx$ 200 mW. Adjust R37 so that the high band OSC MALF indicator lights, then adjust it back so that the indicator goes out. Leave R37 at this point.

c. Variable resistor A4R59, low band oscillator malfunction sensitivity adjustment. Set the SWEEP SELECT switch to .1 SECONDS, vernier at X1. Set the BAND MODE switch to L; if necessary, adjust the F Start and F Stop controls so that the entire band is swept. Be sure the leveling detector is installed properly. Set the MODULATION

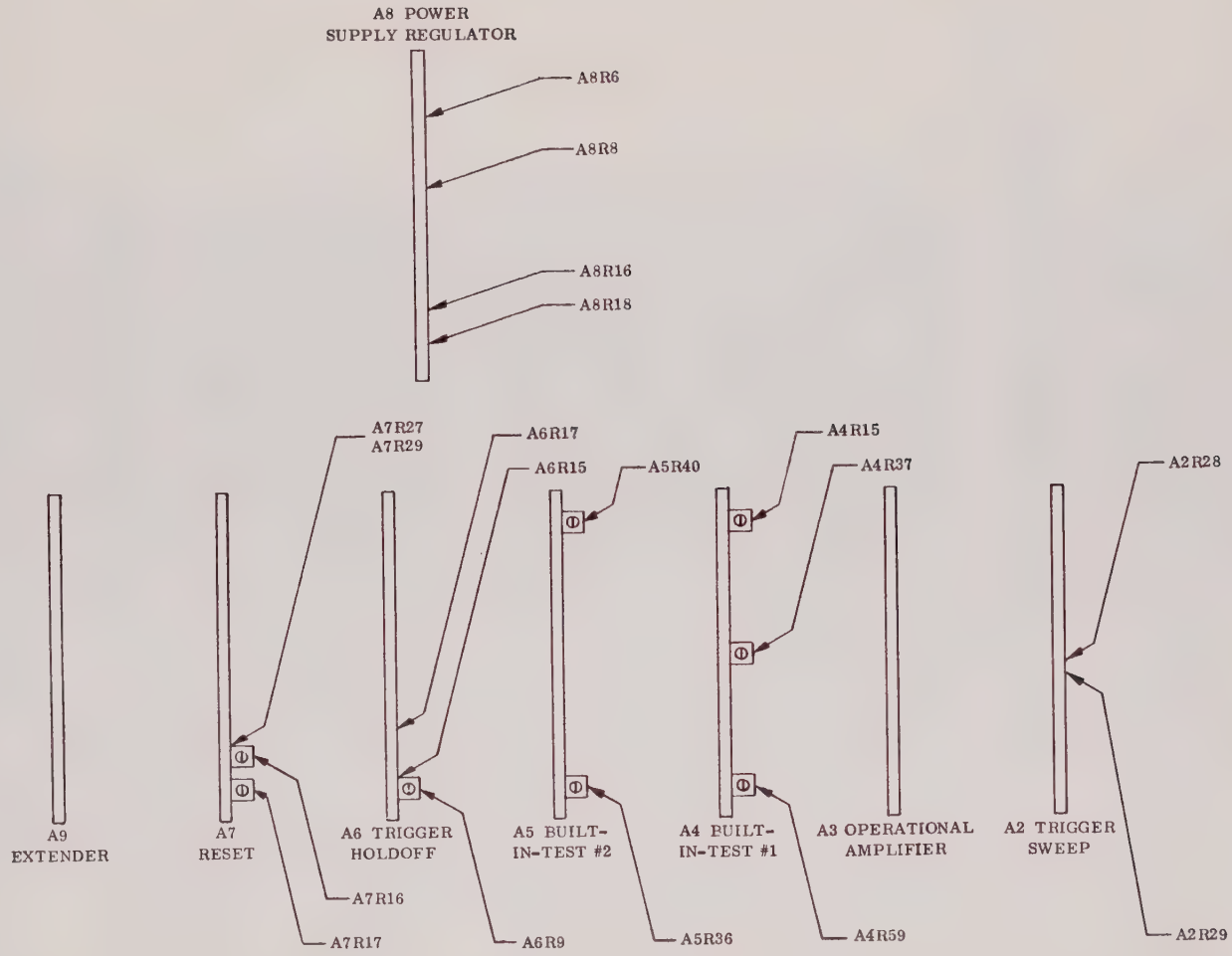

Figure 5.1 Calibration Adjustment Locations

switch to INTERNAL and the PERCENT control mid-way between 0 and 100. Adjust the front-panel POWER ADJ INCR control (R102) fully CCW for minimum power output. Check the output of the leveling detector with a power meter to determine that it is ≈200 mW. Adjust R59 so that the low band OSC MALF indicator lights, then adjust it back so that the indicator goes out. Leave R59 set at this point.

5.3.4 Printed Circuit Assembly A5, Built-in-Test #2. A5 contains two adjustments:

a. Variable resistor A5R36, power amplifiers malfunction sensitivity adjustment. This control is for both the high band and low band amplifiers; test the high band first. Set the SWEEP SELECT switch to .1 SECONDS, vernier to X1. Set the MODULATION switch to INTERNAL and the PERCENT control mid-way between 0 and 100. Set both POWER ADJ INCR controls to the maximum CCW positions for minimum power output. Be sure the leveling detector, load, etc. are properly connected, then set the BAND MODE switch to any high band (H1-H4); sweep the entire band. Check the output with a power meter to ensure that it is ≈ 200 mW, then adjust R36 so that the high band PA MALF indicator lights; back the control off until the indicator toes out. Note the position of the control. Set the BAND MODE switch to L, then repeat the procedure for the low band. Set R36 so that the indicator is unlighted on the band with the lower minimum power output.

b. Variable resistor A5R40, levelers malfunction sensitivity adjustment. This control is for both the high band and low band leveler sensing circuits; test the high band first. Set the SWEEP SELECT switch to MANUAL SCAN, the BAND MODE switch to H1, and the MODULATION switch to OFF. Set the POWER ADJ INCR control to the maximum CW position for maximum power output. Disconnect the leveling cable from J54 (at the leveling detector end); adjust R40 so that the MALF indicator lights. Reconnect the cable and determine that the indicator goes out. Re-adjust R40 if necessary. Set the BAND MODE switch to L, and repeat the procedure for the low band. Adjust R40 so that the indicator lights and goes out as described for both bands.

5.3.5 Printed Circuit Assembly A6, Trigger Holdoff. Resistor A6R17 (trigger zero) and A6R15 (automatic zero set) are selected fixed resistors. Adjustments in these values may only be made at the factory. A6 contains one adjustment:

a. Variable resistor A6R9, trigger holdoff adjustment. Observe sweep ramp output at rear panel connector J10. Put Signal Source in conveniently-viewed sweep on either band; apply 1 kHz square wave to rear panel connector J12 to serve as a trigger. Set the TRIGGER

switch to EXTERNAL/MANUAL. Establish a DC-zero line on the oscilloscope, then adjust R9 so that the sweep is not re-initiated (triggers are not accepted) until the sweep ramp is in its downward integration mode (negative going) and within 60 mV of zero. The sweep must not begin again until the previous sweep is at 0V + 0.06, -0.00 V.

5.3.6 Printed Circuit Assembly A7, Reset. Resistor A7R27 (manual scan width) and A7R29 (manual scan zero) are selected fixed resistors. Adjustments in these values may only be made at the factory. A7 contains two adjustments:

a. Variable resistor A7R16, 1 kHz frequency adjustment. Set MODULATION switch to INTERNAL; insert extender assembly A9 between A7 and J37. Check pin J37-H with frequency counter and adjust R16 for the desired modulating frequency between 950 and 1050 Hz. (Amplitude at J37-H is 5V peak.)

b. Variable resistor A7R17, +10 V adjustment. Set SWEEP SELECT switch to F START. With a digital voltmeter, check pin J37-A voltage. Adjust R19 for +10.00 VDC.

5.4 PERFORMANCE CHECK

Performance of the Model 506 Microwave Signal Source may be checked at any time using this procedure. Generally, the performance should be checked after 180-day routine maintenance and calibration have been accomplished. If the unit fails to perform satisfactorily, refer to Paragraph 5.5, Corrective Maintenance.

5.4.1 Equipment Required. The external test equipment listed in Table 5.4 is required to completely check the Signal Source using this procedure; equivalent equipment may be used. This procedure parallels the Acceptance Test Procedure (ATP) which each unit must pass at the factory.

Table 5.4 Recommended Test Equipment

ITEM INDEX	TYPE OF EQUIPMENT	RECOMMENDED MODEL	QUANTITY
a	RF Power Meter	Kruse Electronics 4020	1
b	Coaxial Attenuator, 30 dB ("N")	Narda 757B-30	1
c	Coaxial Attenuator, 10 dB ("N")	Narda 757C-10	1
d	Waveguide Attenuator, 20 dB	Systron Donner DBG-440A-20	2

e	Crystal Detector ("N")	Aertech D12	1
f	BNC through-termination, 50Ω	Tektronix 011-0049-01	1
g	AC/DC DMM	Systron-Donner 7000A	1
h	Oscilloscope	Tektronix 535A/1A7A plug-in	1
i	Variable Transformer	Superior Electric VS126	1
j	Frequency Counter	Systron-Donner 6316B	1
k	Function Generator	Datapulse 401	1
l	Cables with "N" Connectors	-	-
m	Cables with "BNC" Connectors	-	-
n	Coaxial Termination, 50 Ω 3 W ("N")	Narda 375NM	3
o	Waveguide Termination, 3W (WR-90)	Narda 300C/42X1	1
p	Test Fixture ★	Kruse Electronics 9029	1★
q	Power Supply, 28 VDC ■	Trygon HR40-5B	1■
r	Waveguide to "N" transition	Systron-Donner DGB-057	1
s	Microwave Spectrum Analyzer	Systron-Donner 761B	1
t	Mixers for item s	Systron-Donner 7120, 7121, 7122	1 ea.
u	Waveguide Transitions	Systron-Donner DBFG-018, DBEF-018, DBDE-018	1 ea.

★ Optional ■ Not required if 28 VDC is in system

5.4.2 Initial Setup. Connect the equipment and set all controls as described below. DO NOT APPLY POWER until specifically instructed to do so in 5.4.3.

a. Set all POWER switches to OFF.

b. Set the BAND MODE switch to RF OFF.

c. Set the SWEEP SELECT switch to F START.

d. Set the MANUAL SCAN/VERNIER control to X1.

e. Set the TRIGGER switch to AUTO.

f. Set the MODULATION switch to OFF and the PERCENT control to 0.

g. Connect P1, P2, and P3 from Test Fixture 9029 (item p of 4.1) to rear-panel connectors J1 POWER INPUT, J2 DC SIGNAL, and J3 REMOTE.

h. Connect the output of the function generator (item k of 4.1) to J11 on the rear panel. Set the generator controls to supply an ac-coupled or negative going 5 V, 1 kHz square wave.

i. Set the power switches of Test Fixture 9029 to their "off" positions.

j. Re-check the DRAWER, SWP/OSC, H BAND PA, and L BAND PA POWER switches to ensure that they are all set to OFF.

k. Connect the power cord from Test Fixture 9029 to the output of the variable transformer (item i of Table 5.4).

l. Connect the power cord of the variable transformer to a source of ≈117 V rms, 60 Hz, 1 ϕpower. The power source must be capable of supplying up to 15 A, and must include a third wire ground connection.

m. Adjust the variable transformer for an output of 115 V AC as read on its built-in meter.

n. Connect the output of the 28 VDC power supply to J4 (+) and J5 (-) of Test Fixture 9029.

o. Turn on the power supply and set the output to 28 ± 1 V; if there is a current limit control, set it to 1 A.

p. Review the test procedures that follow, and determine which pieces of test equipment from Table 5.3 will be required. Turn on the equipment (except power supplies) and allow it to stabilize before proceeding with the tests.

5.4.3 Power Supply Tests. The following tests are performed to ensure that the internal power supplies are operating within specified limits of output, ripple and regulation:

a. Using the digital voltmeter (item g of Table 5.4), measure between TP5 GND (black) and TP7 + 20V (orange). Voltage must be +20 ± .02 V.

b. Vary the output voltage of the variable transformer from 103.5 to 126.5 V (115 V ± 10%). Determine that the voltage change at TP7 does not exceed ± .002 V (regulation < .01%). Re-set the transformer to 115 V.

c. Set the oscilloscope controls (item h of Table 5.4) to measure ripple (≈ 2 mS/div sweep rate, AC coupled 100 μ V/div vertical). Set vertical bandwidth controls to limit bandwidth to the 1 Hz - 30 kHz range.

d. Remove the digital voltmeter probes, and connect the oscilloscope probes to TP5 and TP7 (use differential mode). Ensure that power supply ripple does not exceed 400 μV p-p.

e. Using the digital voltmeter (item g of Table 5.4), measure between TP 5 GND (black) and TP8 - 20 V (violet). Voltage must be -20 ± .02V.

f. Vary the line voltage ± 10%; the voltage change must not exceed ± .002 V.

g. Determine that the ripple voltage does not exceed 400 μV p-p.

h. Measure the voltage between TP5 GND (black) and TP6 250 V (red). Determine that it is + 250 ± 25 V.

i. Determine that the p-p ripple voltage does not exceed 1 V.

5.4.4 BIT Function Checks. The following procedure is performed to test the operation of the various built-in test (BIT) circuits:

WARNING

MANY OF THESE TESTS ARE MADE WITH THE EQUIPMENT COVERS REMOVED AND POWER ON. USE CAUTION TO AVOID PERSONAL INJURY OR DAMAGE TO THE EQUIPMENT.

a. Set the DRAWER POWER 28 VDC switch to ON. Verify that the 28 VDC indicator lights.

b. Set the DRAWER POWER 115 V 60 Hz switch to ON. Verify that the 115 V 60 Hz indicator lights.

c. Set the SWP/OSC POWER switch to ON. Verify that the ON indicator lights.

d. Verify that the STATUS READY indicator is lighted.

e. Set the H BAND POWER switch to ON. Verify that the ON indicator lights. Ignore the H BAND PA MALF indicator at this time.

f. Set the L BAND PA POWER switch to ON. Verify that the ON indicator lights.

g. Verify that the STATUS READY light goes out as the 115 V 60 Hz, 28 VDC, and SWP/OSC ON switches are momentarily turned OFF, then lights as the switch is set back to ON.

h. Set the SWEEP SELECT switch to 1 SECOND and the TRIGGER switch to EXTERNAL/MANUAL.

i. Verify that the SWEEP MALF indicator lights. Press the MANUAL Pushbutton and verify that the SWEEP MALF indicator goes out, then lights again at the end of sweep. Set the TRIGGER switch to AUTO.

j. Locate the over-temperature sensor inside the unit; heat it with the air from a heat gun. Verify that the DRAWER OVER TEMP indicator lights. Verify that all other indicators except DRAWER + 28 VDC go out.

k. Allow the sensor to cool; verify that the DRAWER OVER TEMP indicator goes out.

l. Press the DRAWER MALF PRESS TO RESET switch; verify that the 115 VAC 60 HZ, SWP/OSC ON, H BAND PA ON (After 60 seconds), and L BAND PA ON indicators light.

m. Repeat steps j and k.

n. Press the remote "reset" switch on the test fixture; verify that the results are the same as those noted in step l.

o. Set the BAND MODE switch to H1 and set the H BAND PA ON power switch to OFF.

p. Set the H BAND PA ON switch to ON; verify that the HIGH BAND PA MALF indicator lights for ≈ 60 seconds, then goes out.

q. Disconnect power connector P51 from H Band oscillator module 962103. Verify that the HIGH BAND OSC MALF indicator lights.

r. Re-connect power connector P51. Verify that the HIGH BAND OSC MALF indicator goes out.

s. Disconnect RF output connector P61 from the H Band oscillator module. Verify that the HIGH BAND PA MALF indicator lights.

t. Re-connect P61 and verify that the PA MALF indicator goes out.

u. Disconnect the leveling cable from J5 LEVELER IN on the front panel; verify that the HIGH BAND LEVEL MALF indicator lights.

v. Re-connect the leveling cable to J5 and verify that the HIGH BAND LEVEL MALF indicator goes out.

w. Set the BAND MODE switch to L.

x. Set the L BAND PA ON power switch to OFF.

y. Set the L BAND PA ON switch to ON; verify that the LOW BAND PA MALF indicator flashes momentarily.

z. Disconnect power connector P81 from L Band oscillator module 962104. Verify that the LOW BAND OSC MALF indicator lights. Re-connect the cable and verify that the MALF indicator goes out.

aa. Disconnect RF connector P91 from the low band oscillator. Verify that the Low Band PA MALF indicator lights, then goes out when P91 is re-connected.

ab. Disconnect the leveling cable from J7 LEVELER IN on the front panel; verify that the LOW BAND LEVEL MALF indicator lights. Re-connect the leveling cable to J7 and verify that the MALF indicator goes out.

ac. Verify that the STATUS READY indicator is lighted.

5.4.5 Remote Control Function Checks. The following procedure assures that the remote control functions of the Signal Source are functioning properly:

WARNING

ALL RF OUTPUTS MUST BE TERMINATED. TO AVOID POSSIBLE INJURY, DO NOT LOOK INTO UNTERMINATED WAVEGUIDE OR COAXIAL LINES.

a. Ensure that the five front panel POWER switches are set to OFF and that the test fixture power switches are set to their "off" positions.

b. Set both DRAWER POWER switches, the SWP/OSC POWER switch, the H BAND PA POWER switch, and the L BAND PA POWER switch to ON. None of the indicators will light.

c. Attach the high band directional detector to J4 RF OUT and connect the leveling cable to J5. Attach waveguide termination (item o of Table 5.4) to the output of the directional detector.

d. Attach a low band directional detector to J6 RF OUT and connect the leveling cable to J7. Attach a coaxial termination (item n of Table 5.4) to the output of the directional detector.

e. Connect a 10 dB fixed attenuator (item c of Table 5.4) between J8 H BAND RF SAMPLE on the rear panel and the input of the frequency counter (item j of Table 5.4).

f. Set the test fixture +28 VDC power switch to "on". Verify that the Signal Source 28 VDC indicator lights.

g. Set the BAND MODE switch to REMOTE: set the test fixture 115V power switch to its "on" positions. Set the test fixture "power on" switch to "on", and verify the Signal Source 115V 60 Hz, SWP/OSC ON, H BAND PA ON, L PA BAND ON, and STATUS READY indicators light.

h. Set the remote RF switch to "on".

i. Set the test fixture remote band mode switch to the "H1" position. Wait 60 seconds for the H Band power amplifier time delay to elapse; the HIGH BAND PA MALF light will be on during this period.

j. Note the frequency counter reading and determine that the output frequency is within H Band.

k. Repeat steps i and j for H2, H3 and H4.

l. Remove the frequency counter cable and attenuator from J8 and move them to J9 L BAND RF SAMPLE.

m. Set the test fixture remote band mode switch to the "L" position; check the frequency counter reading and determine that it is within L Band.

n. Set the BAND MODE switch to RF OFF.

o. Set all five POWER switches to OFF.

5.4.6 Sweep Generator Tests. The following tests check the sweep circuits of the Model 506 Signal Source:

a. Set the BAND MODE switch to H1 and the SWEEP SELECT switch to 10 SECONDS.

b. Set the SWEEP MODE TRIGGER switch to EXTERNAL/MANUAL. The SWEEP MALF indicator will light, as the sweep is inhibited.

c. Connect the digital voltmeter to J10 SWP/OUT on the rear panel. The voltage must be 0 ± .040 V.

d. Remove the digital voltmeter from J10 and substitute the oscilloscope. Set the oscilloscope controls for DC coupling at a sensitivity of 2V/div.

e. Press and release the EXTERNAL/MANUAL pushbutton. Verify that one complete 0 - 10 V sweep ramp is displayed each time the button is pressed.

f. Set the SWEEP MODE TRIGGER switch to LINE and the SWEEP SELECT switch to .1 SECONDS. Verify that a continuous series of 0 to + 10 V sweep ramps is present, synchronized with line frequency. This is most easily done by setting the oscilloscope triggering controls to a "line" position.

g. Remove the oscilloscope from J10 and re-attach the digital voltmeter.

h. Set the SWEEP SELECT switch to MANUAL SCAN. With the MANUAL SCAN/VERNIER control set fully CCW, the voltage at J10 must be 0 ± 0.1 V.

i. Turn the MANUAL SCAN/VERNIER control fully CW and measure the voltage; it must be + 10 ± 0.1 V.

j. Set the SWEEP MODE TRIGGER switch to EXTERNAL/MANUAL.

k. Remove the digital voltmeter from J10 and attach the oscilloscope.

l. Connect a cable between the external trigger source (function generator) output and J12 EXT TRIG IN. Synchronize the oscilloscope to the trigger source.

m. Set the SWEEP SELECT switch to 1 SECOND and the MANUAL SCAN/VERNIER control to approximately mid-range.

n. Momentarily connect a trigger pulse to J12; verify that the sweep circuits of the Signal Source generate a ramp with each trigger.

o. Set the SWEEP MODE TRIGGER switch to AUTO; using the counter, oscilloscope time base sweep speeds, or other accurate timer, measure the sweep and retrace times of the sweep oscillator:

SWEEP SELECT	VERNIER	Sweep Time	Retrace Time
.1	X1	85 - 95 mS	8 - 12 mS
.1	X10	940 - 1040 mS	8 - 12 mS
1	X1	0.85 - 0.95 S	80 - 120 mS
1	X10	9.4 - 10.4 S	80 - 120 mS
10	X1	8.5 - 9.5 S	0.8 - 1.2 S
10	X10	94 - 104 S	0.8 - 1.2 S

p. This concludes the sweep generator tests. Set the BAND MODE switch to RF OFF and the SWEEP SELECT switch to MANUAL SCAN.

5.4.7 Frequency Band Adjustment and Accuracy Tests.

5.4.7.1 HIGH BAND TESTS. The following procedure tests the high band RF sampling circuitry and presets the frequency contols.

a. Set the BAND MODE switch to RF OFF. Set the SWEEP SELECT switch to F START and the MANUAL SCAN/VERNIER control to maximum CCW.

b. Connect the equipment as shown in Figure 5.2. Open the ACCESS TO FREQUENCY BAND SET cover.

c. Be sure the MODULATION control is set to OFF, and set the BAND MODE switch to H1.

d. Measure the output frequency with the counter; determine that the output frequency can be adjusted from low to high limits by adjusting the H1 START potentiometer from maximum CCW to maximum CW.

e. Adjust the H1 START potentiometer for the desired H1 START Test frequency.

f. Repeat steps c through e for the H2, H3, and H4 positions of the BAND MODE switch.

g. Set the SWEEP SELECT switch to F STOP and the BAND MODE switch to H1. Measure the output frequency with the counter; determine that the output frequency can be adjusted from low to high limits by adjusting the H1 STOP potentiometer from maximum CCW to maximum CW.

h. Adjust the H1 STOP potentiometer for the desired H1 STOP test frequency.

i. Repeat steps g and h for the H2, J3, and H4 positions of the BAND MODE switch.

j. Set the SWEEP SELECT switch to 10 SECONDS and the MANUAL SCAN/VERNIER control to X10; observe the frequency counter as the Signal Source slowly sweeps and verify that it is sweeping from low to high limits (or test frequency limits as set) for H1, H2, H3, and H4.

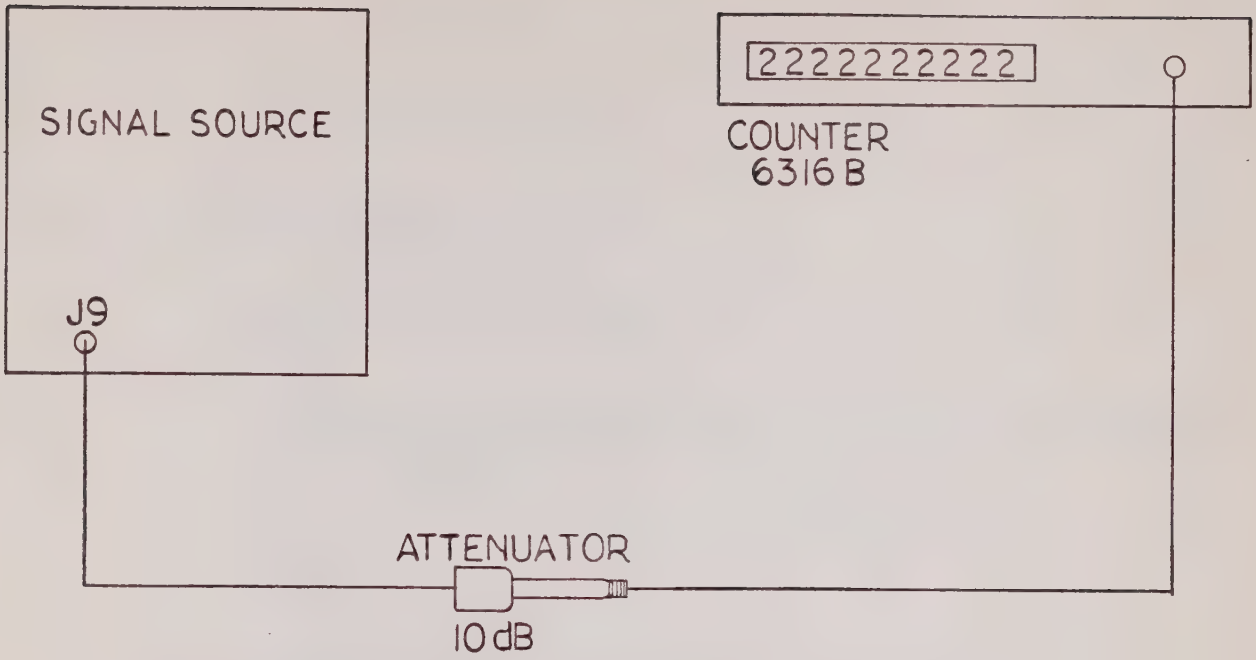

Figure 5.2 Test Setup for High Band Frequency Adjustment

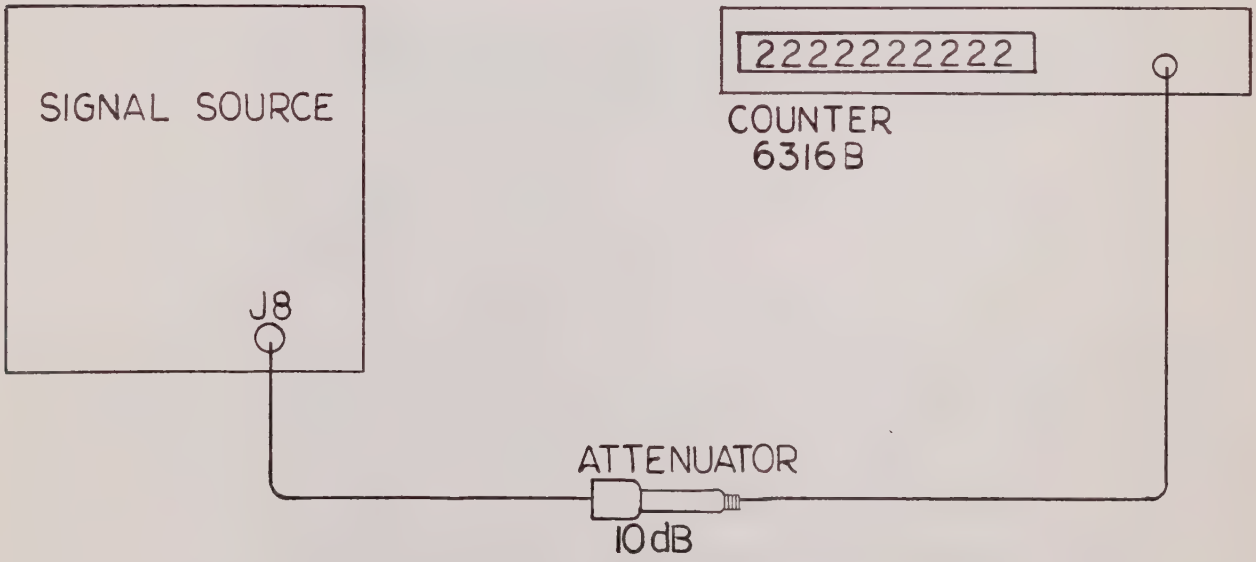

Figure 5.3 Test Setup for Low Band Frequency Adjustment

k. Return the MANUAL SCAN/VERNIER control to X1 and the SWEEP SELECT switch to F START.

5.4.7.2 LOW BAND TESTS. The following procedure tests the low band RF sampling circuitry and presets the frequency controls:

a. Connect the equipment as shown in Figure 5.3. Set the BAND MODE switch to L.

b. Measure the output frequency; determine that it can be set from low to high limits by adjusting the L START potentiometer from maximum CCW to maximum CW.

c. Adjust the L START potentiometer for the desired L START Test frequency.

d. Set the SWEEP SELECT switch to F STOP and measure the output frequency. It must be adjustable from low to high limits by adjusting the L STOP potentiometer from maximum CCW to maximum CW.

e. Adjust the L STOP potentiometer for the desired L STOP Test frequency.

f. Set the SWEEP SELECT switch to 10 SECONDS and the MANUAL SCAN/VERNIER control to X 10; observe the frequency counter and verify that the Signal Source is sweeping properly.

g. Set the BAND MODE switch to RF OFF.

h. Disconnect the cable from J9.

5.4.8 RF Output Level and Flatness Tests.

5.4.8.1 HIGH BAND TESTS. The following procedure tests the high band RF source for output level, flatness and frequency sensitivity:

a. Be sure the BAND MODE switch is set to RF OFF.

b. Remove the termination from the Kruse 1056-1 directional detector.

c. Connect the equipment as shown in Figure 5.4.

d. If it has not already been done, allow the power meter to fully stabilize. Zero and calibrate the power meter as required.

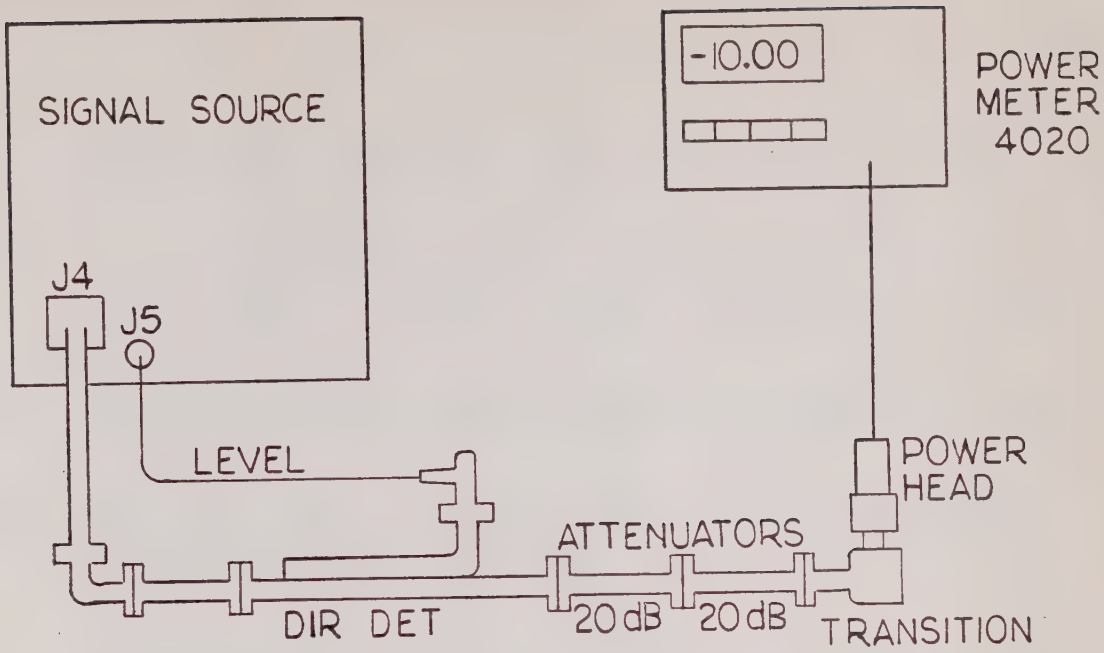

Figure 5.4 Test Setup for High Band Output Level Test

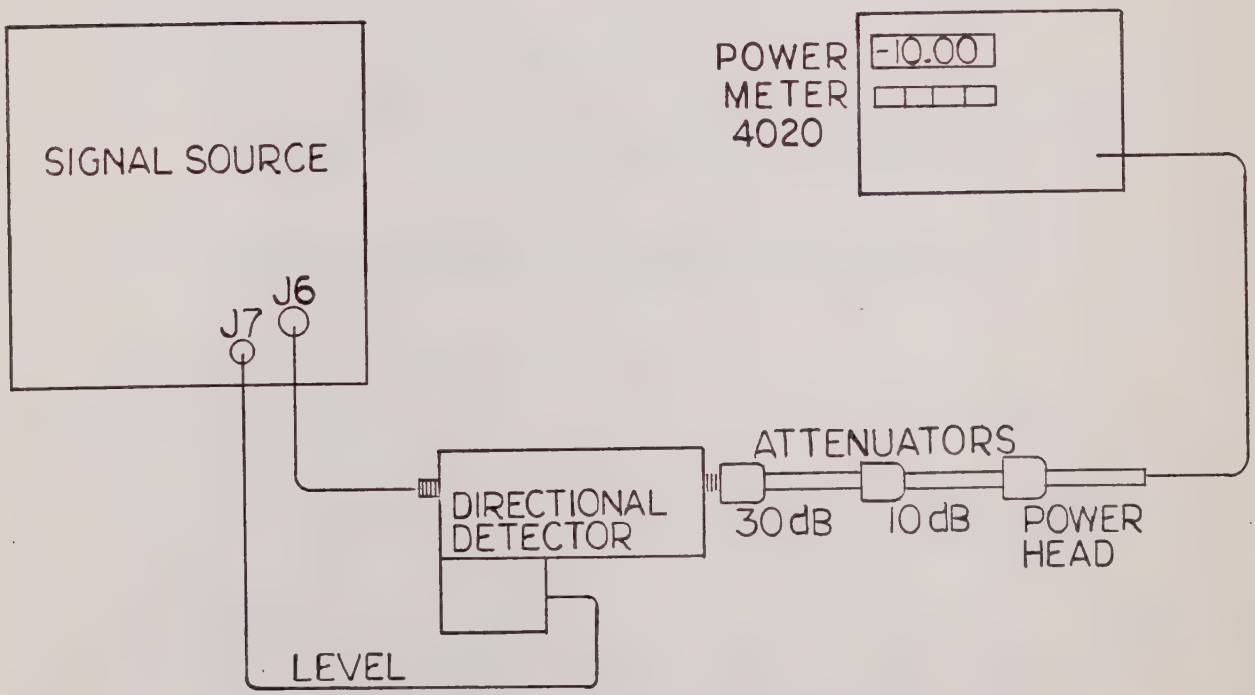

Figure 5.5 Test Setup for Low Band Output Level Test

e. Set the SWEEP SELECT switch to MANUAL SCAN and the MANUAL SCAN/VERNIER control to mid-range.

f. Turn the BAND MODE switch to H1 and note the reading on the power meter; it should be -10 dBm, 0.1 mw (40 dB below 1 W). If it is not, adjust the HIGH BAND LEVELER POWER ADJ INCR control for -10 dBm.

g. Set the SWEEP SELECT switch to 10 SECONDS. As the Signal Source slowly sweeps across the band, verify that power variations do not exceed ± 0.2 dB.

h. Repeat steps f and g for the H2, H3 and H4 positions of the BAND MODE switch. This is not necessary if H2, H3 and H4 have been set for the same frequency range as H1.

i. Set the BAND MODE switch to RF OFF, then remove the test equipment shown in Figure 5.4.

j. Re-attach the waveguide termination to the directional detector.

k. Connect the power head of the power meter (item a of Table 5.4) to J8 through a 10 dB attenuator (item c).

l. Set the SWEEP SELECT switch to MANUAL SCAN and the BAND MODE switch to H1. Ensure that the power meter reading is ≥ 0 dBm throughout the entire range of the MANUAL SCAN/VERNIER control.

m. Repeat step l for H2, H3 and H4 settings of the BAND MODE switch if H2, H3 and H4 are set for different frequency ranges than H1.

n. Set the BAND MODE switch to RF OFF.

5.4.8.2 LOW BAND TESTS. The following procedure tests the low band RF source for output level, flatness, and frequency sensitivity:

a. Remove the termination from the Kruse 1051-1 directional detector.

b. Connect the test equipment as shown in Figure 5.5.

c. With the MANUAL SCAN/VERNIER control set to approximately mid-range, turn the BAND MODE switch to L and note the reading on the power meter; it should be -10 dBm, 0.1 mw (40 dB below 1 W). If it is not, adjust the LOW BAND LEVELER POWER ADJ INCR control for -10 dBm.

d. Set the SWEEP SELECT switch to 10 SECONDS. As the Signal Source slowly sweeps across the band, verify that power variations do not exceed ± 0.2 dB.

e. Connect the power head of the power meter to J9 through a 10 dB attenuator.

f. Set the SWEEP SELECT switch to MANUAL SCAN and the BAND MODE switch to L. Ensure that the power meter reading is ≥ 0 dBm throughout the entire range of the MANUAL SCAN/ VERNIER control.

g. Set the BAND MODE switch to RF OFF, and remove the power head and 10 dB attenuator from J9.

5.4.9 Modulation Tests.

5.4.9.1 HIGH BAND TESTS. The following procedure tests the modulation circuitry of the Signal Source and the ability of the high band RF source to be modulated:

a. Remove the termination from the directional detector and connect the equipment as shown in Figure 5.6.

b. Set the MODULATION switch to INTERNAL and the PERCENT control to 100.

c. Set the SWEEP SELECT switch to .1 SECONDS and the MANUAL SCAN/ VERNIER control to X 1.

d. Set the BAND MODE switch to H1.

e. Set the TRIGGER switch to AUTO.

f. Adjust the display unit controls to allow viewing of the detected waveform. The waveform should be a square wave with rise and fall times $< 10\ \mu$ S and symmetry error $< 5\%$ at 100% modulation. Symmetry error (D) is defined as a percentage of difference between "on" time (T_{on}) and one-half the period time (T) of a square wave cycle to one-half of period time of the square wave cycle:

$$D = \frac{T_{on} - .5T}{.5T} \times 100$$

g. The frequency of the square wave is adjustable from ≈950 to ≈ 1050 Hz with the internal adjustment. Verify that it is adjusted for 1 kHz.

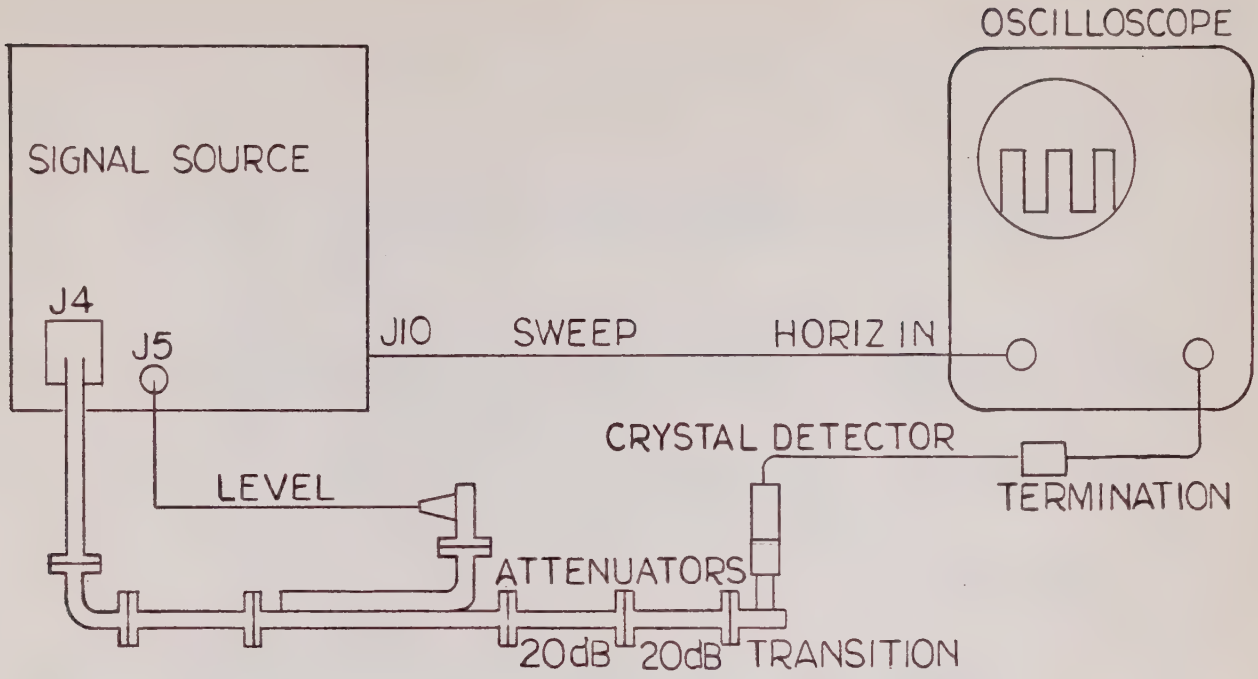

Figure 5.6 Test Setup for High Band Modulation Test

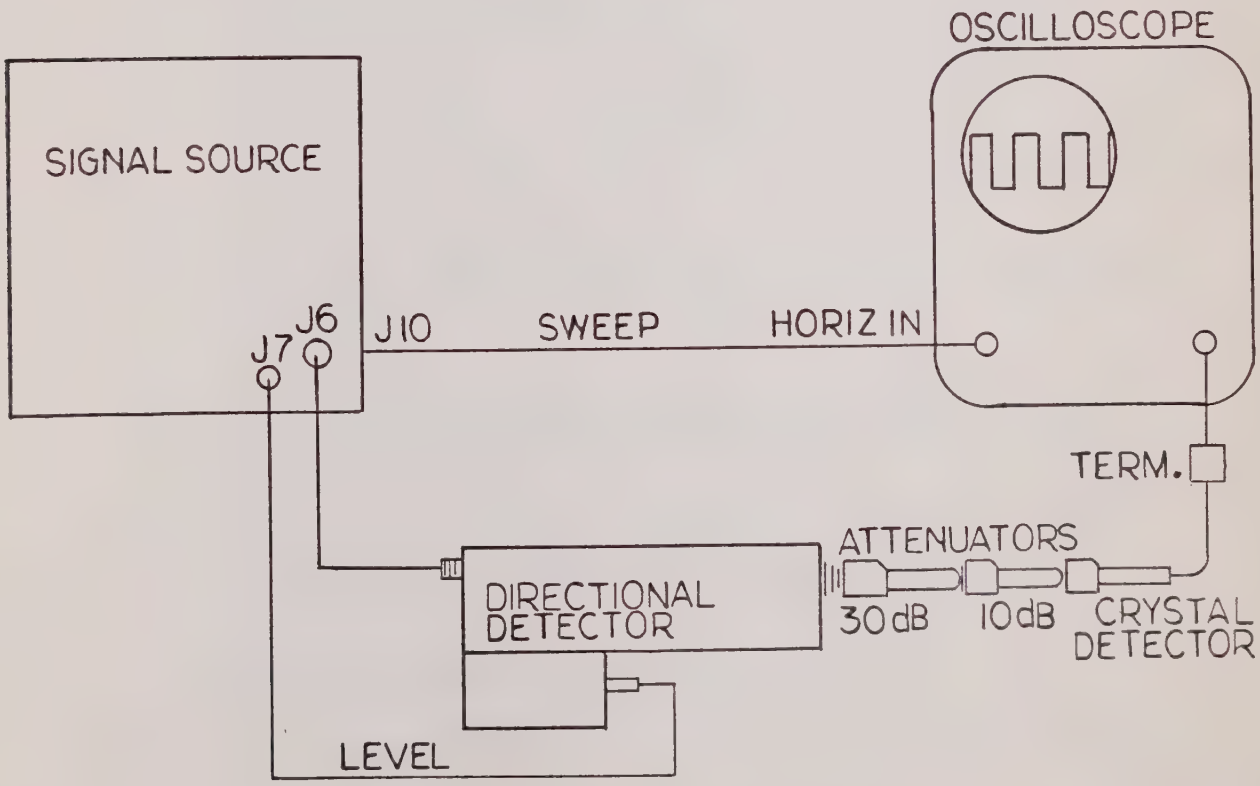

Figure 5.7 Test Setup for Low Band Modulation Test

h. Adjust the PE RCENT control through its entire range; determine that the modulation percentage is adjustable from 100 to 0%, and back to 100%.

i. Set the MODULATION switch to EXTERNAL, and adjust the PERCENT control through its range. Determine that the modulation with external input is adjustable from 100 to 0%.

j. This completes the high band modulation tests. Set the BAND MODE switch to RF OFF, then remove the test equipment.

k. Attach the waveguide termination to the H Band directional detector.

5.4.9.2 LOW BAND TESTS. The following procedure tests the modulation circuitry of the Signal Source and the ability of the low band source to be modulated:

a. Remove the termination from the directional detector; connect the equipment as shown in Figure 5.7.

b. Set the MODULATION switch to INTERNAL and the PERCENT control to 100.

c. Set the BAND MODE switch to L.

d. Determine that the detected waveform is a square wave with rise and fall times $< 10\ \mu S$ and symmetry error of $< 5\%$ (see 5.4.9.1, step f for method).

e. Adjust the PERCENT control through its entire range; determine that the modulation percentage is adjustable from 100 to 0%, and back to 100%.

f. Set the MODULATION switch to EXTERNAL and determine that the modulation with an external input is adjustable from 100 to 0%.

g. This completes the low band modulation tests. Set the BAND MODE switch to RF OFF, then remove the test equipment.

h. Attach the coaxial termination to the L Band directional detector.

5.4.10 Spectral Purity Measurements

5.4.10.1 HIGH BAND TESTS. The following procedure checks the high band output of the Signal Source for spurious content and harmonic distortion:

a. Remove the waveguide termination from the high band directional coupler; connect the test equipment as shown in Figure 5.8.

b. Use two 20 dB attenuators in series; this may be changed later for convenience as long as excessive power levels do not cause damage to the spectrum analyzer or cause internally-generated spurious responses due to high power.

c. Set the SWEEP SELECT switch to F START and the BAND MODE switch to H1.

d. Verify that in-band spurious content is > 40 dB below the level of the carrier. (> 1 mHz away from carrier frequency).

e. Set the SWEEP SELECT switch to F STOP and repeat step d.

f. Set the BAND MODE switch to RF OFF and connect the attenuator output through the appropriate waveguide transition(s) to the appropriate mixer (item t). Connect the output of the mixer to the external mixer input of the spectrum analyzer.

g. Set the BAND MODE switch to H1 and verify that the second and third harmonic content of the output signal is >20 dB below the level of the fundamental.

h. Set the SWEEP SELECT switch to F START and repeat step g.

i. Set the BAND MODE switch to RF OFF and remove the attenuator, transitions, and mixer. Attach a waveguide termination to the output of the high band directional detector.

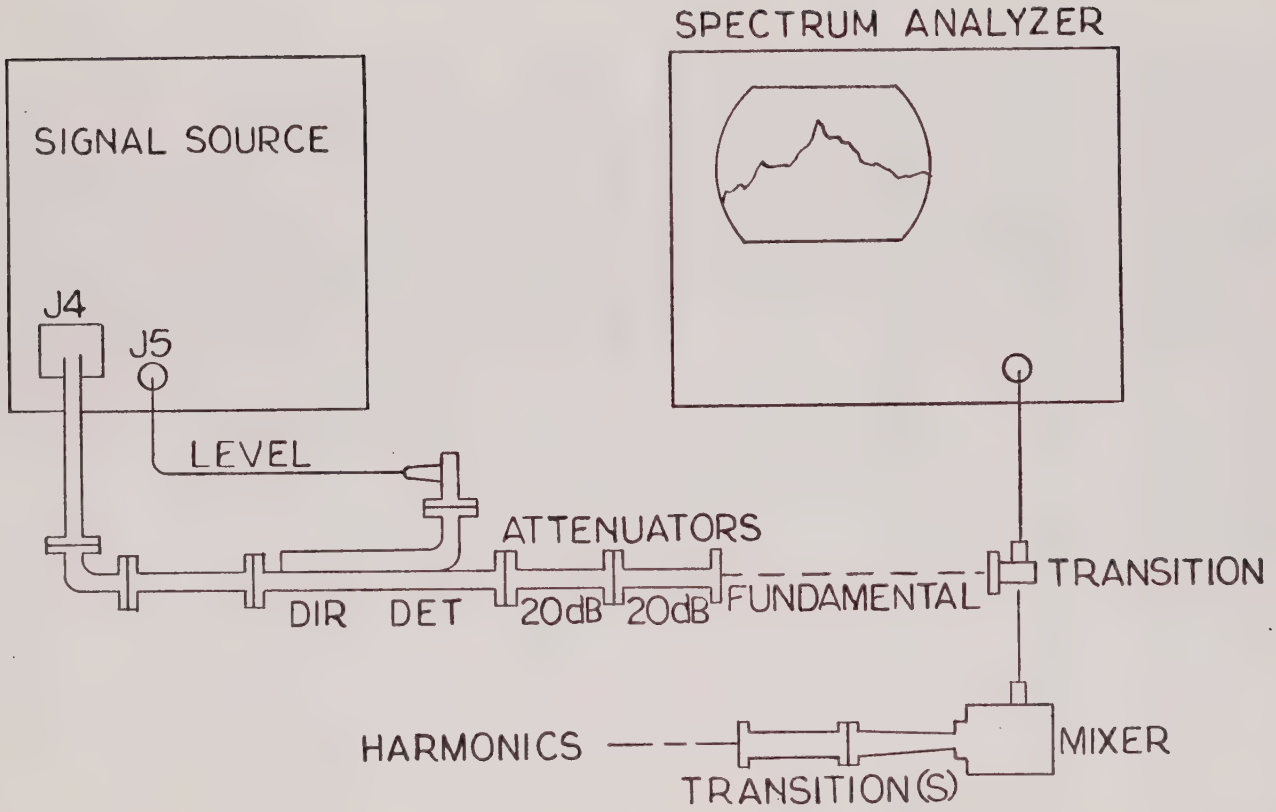

Figure 5.8 Test Setup for High Band Spectral Purity Test

5.4.10.2 LOW BAND TESTS. The following procedure checks the low band signal source for spurious content and harmonic distortion:

a. Remove the coaxial termination from the output of the low band directional detector; connect the equipment as shown in Figure 5.9. Use 40 dB of attenuation; this may be changed later for convenience as long as excessive power levels do not cause damage to the spectrum analyzer or cause internally-generated spurious responses due to high power.

b. Set the BAND MODE switch to L; verify that in-band spurious content is >40 dB below the level of the carrier. Ignore spurious signals closer than 1 MHz.

c. Verify that the second and third harmonic content of the signal is >20 dB below the level of the fundamental.

d. Set the SWEEP SELECT switch to F STOP and repeat steps b and c.

e. Set the H BAND PA ON switch to OFF.

f. Set the L BAND PA ON switch to OFF.

g. Set the SWP/OSC POWER ON switch to OFF.

h. Set the DRAWER 115 VAC 60 Hz switch to OFF.

i. Set the DRAWER + 28 VDC switch to OFF.

j. Remove all terminations and test equipment.

k. Set all power switches of the test fixture to their "off" positions.

l. Remove all cables from the Signal Source rear panel connectors.

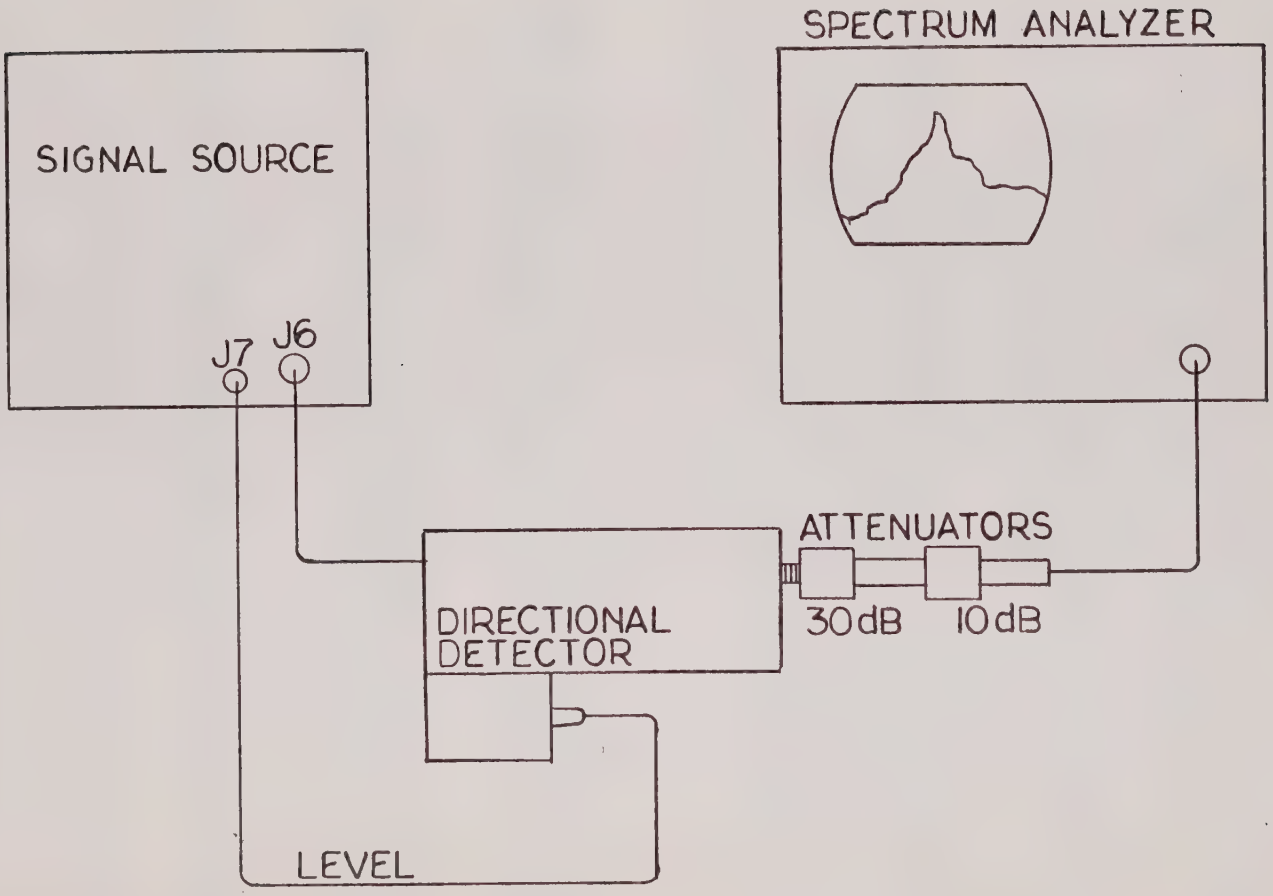

Figure 5.9 Test Setup for Low Band Spectral Purity Test

5.5 CORRECTIVE MAINTENANCE

5.5.1 General. Repair of the 506 is normally limited to location, removal, and replacement of malfunctioning modules. Except for printed circuit assemblies A4, A5, A6, and A7, no internal calibration adjustments are required when modules are replaced; all adjustments can be made with front panel controls. When A4, A5, A6, or A7 are replaced, the appropriate portions of Paragraph 5.3 should be performed.

Table 5.1 lists the modules that may be repaired at the depot level and those that must be returned to the factory for repair. FIELD MAINTENANCE IS LIMITED TO REMOVAL AND REPLACEMENT OF MALFUNCTIONING MODULES.

To avoid damage to the printed circuit assemblies, solder or remove components only with a low power (25 to 50 W, 500 to 700°F) soldering iron. Do not use soldering guns or large irons; use only 63-37 or 60-40 rosin core solder. To remove integrated circuits, use a special iron tip that unsolders all leads at the same time (available from Ungar and other manufacturers). Remove excess solder from circuit board holes with a vacuum device. After repair of a printed circuit assembly, the area affected to be conformal coated. Use Humiseal® Type 1A33 or equivalent compound. (Columbia Technical Corp., Woodside, N.Y.)

5.5.2 Trouble Isolation. Standard trouble isolation techniques should be used to locate malfunctioning modules and components. Table 5.5 is a trouble isolation guide keyed to the 506 front-panel malfunction indicators. Before a module is replaced, make sure that the input voltages and levels are correct.

Each 506 includes a 950479 extender for servicing the printed circuit assemblies and for providing access to the card cage connector pins from the top of the chassis. When using the extender, take care not to insert the assemblies into the wrong connectors or in the wrong direction.

5.5.3 Module Access. Figure 5.10 shows the location of all modules accessible from the top and bottom of the chassis. Removal of the items should be accomplished as described below; reverse the procedures to install a module:

5.5.3.1 TOP COVER. Remove top cover by removing 26 Phillips-head screws.

5.5.3.2 BOTTOM COVER. Remove bottom cover by removing 26 Phillips-head screws.

5.5.3.3 PRINTED CIRCUIT ASSEMBLIES A2 - A7 AND A9. Lift white plastic knob release card cage cover. Lift up outer edges of card hold-down locks until card is ejected from connector; then lift card straight up.

5.5.3.4 PRINTED CIRCUIT ASSEMBLY A8. Remove two (2) Phillips-head screws holding A8 to A10. A right-angle screwdriver may be required.

5.5.3.5 FREQUENCY SET ASSEMBLY A15. Remove six (6) Phillips-head screws holding A15 to front panel and two (2) screws holding A15 to bracket inside front panel. The hinged cover need not be removed from the front panel if the foam is pushed down to reveal the two bottom screws. Also remove screws holding P41 (2) and P42 (2) to A15.

5.5.3.6 HIGH BAND POWER AMPLIFIER A16. Remove eight (8) Phillips-head screws holding A16 to chassis. Disconnect coaxial cables to J62 and J63 and power cable to J52.

5.5.3.7 HIGH BAND OSCILLATOR ASSEMBLY A17. Remove four (4) screws holding oscillator module to right side panel (as you face the unit). Disconnect coaxial cable to J91, lift module up, and disconnect power cable J81.

5.5.3.8 LOW BAND OSCILLATOR ASSEMBLY A18. Remove four (4) screws holding oscillator module to right side panel (as you face the unit). Disconnect coaxial cable to J91, lift module up, and disconnect power cable J81.

5.5.3.9 LOW BAND POWER AMPLIFIER A19. For easiest removal, take off rear panel first (5.5.3.11). Remove power connector to J82 and coaxial cables to J92 and J93. Remove two (2) screws at right of amplifier (as you look down on unit from the rear). Loosen, but do not remove two (2) screws holding unit down at left. Tilt amplifier up, away from the hold-down bar at the left, and lift out.

5.5.3.10 POWER SUPPLY A20. The rear panel must be removed first (5.5.3.11); unscrew two (2) screws at left of power supply (as you look down from the rear). Loosen, but do not remove the two (2) screws at the right. Tilt power supply up, away from the hold-down bar at the right, and partially lift out. Disconnect power cable J21 from the bottom, and completely remove power supply.

5.5.3.11 REAR PANEL. Fourteen (14) screws hold the back panel in place. The top cover must be removed before the rear panel can be taken off.

5.5.4 Waveforms. The waveforms of Figure 5.11 have been included as an aid to trouble isolation. The waveforms were photographed as they appeared on the screen of an oscilloscope (Tektronix 535A with Type D preamplifier). A x1 probe was used to connect to appropriate Model 506 connectors. The location of the test point, special 506 control settings, vertical sensitivity, coupling, and trigger method are given for each photograph.

Table 5.5 Trouble Isolation Guide

	CONDITIONS	INDICATION	POSSIBLE CAUSE	CHECK	REPAIR/ REPLACE
1	28 VDC Circuit Breaker CB2 set to ON	28 VDC indicator DS2 does not light	28 VDC not reaching CB2	External power supply	Power supply
				Cabling between power supply and J2	Cabling as required
2			Internal defects	Measure TP3 (+) to TP4 (-) for 28 VDC	Replace CB2
				Lamps DS2-A and B	Replace lamps
3		CB2 trips	Internal short circuit	Remove A7; check for short circuit	Repair or replace shorted wiring or components
				Check A7 for shorts	Replace A7
4	115 VAC 60 HZ Circuit Breaker CB1 set to ON	115 VAC 60 HZ indicator DS1 does not light	115 VAC not reaching CB1	Power mains	115 VAC supply
				Cabling between power source and J1	Cabling as required
5			28 VDC not reaching unit	See lines 1 - 3	
6		OVER TEMP indicator DS8 and/or DRAWER MALF indicator DS15 lighted	Internal temperature exceeds +71°C	Press and release RESET switch S6	
7	OVER TEMP and DRAWER MALF indicators unlighted		Remote "ON" not enabled	Determine that J3-A is connected to gnd	Remote cable
				Measure TP1 to TP2 for 115 VAC. CAUTION!	

	CONDITIONS	INDICATION	POSSIBLE CAUSE	CHECK	REPAIR/ REPLACE
8			Internal defects	CB1, K1, FL1, FL2 if 115 VAC missing at TP1- TP2	Replace defective components or wiring
			(CHECK WITH POWER DISCONNECTED)	Lamps DS-1A and B if 115 VAC present	Replace lamps
				Relay K2	Replace K2
9		CB1 trips	Internal short circuit	Wiring and components	Replace shorted wires, components
10	SWP/OSC Circuit Breaker CB3 set to ON; Band Mode at RF OFF	SWP/OSC ON indicator DS3 does not light	28 V not reaching 28 V buss #2	Check for +28 V at CB3-NO and C	CB3 and wiring
			Lamp failure	Lamps DS3-A and B	Lamps
11		CB3 trips	Internal short circuit	Wiring and components	Replace shorted wires, components
12		SWEEP MALF indicator DS7 and/or DRAWER MALF indicator DS15 lighted	Normal indication of manual trigger sweep mode	Check sweep circuit control settings; if unit is in manual trigger mode, press MANUAL pushbutton. Indicator will go out when sweep starts, come on when sweep stops.	
13			Power supply failure	Measure TP7 (+) to TP5 (-) for + 20 V. Measure TP8 (-) to TP5 (+) for - 20 V. Measure TP6 (+) to TP5 (- for +250 V.	Power supply A20

	CONDITIONS	INDICATION	POSSIBLE CAUSE	CHECK	REPAIR/ REPLACE
14	Sweep Trigger switch at AUTO		Sweep circuit failure	Check rear-panel connector J10 with oscilloscope; output must be 0 V in F START, +10 V in F STOP, 0 ramp in .1, 1, 10, and manually-controlled 0 to +10 V in MAN SCAN	A2, A6, chassis components and wiring as required
15		J10 output within specifications	BIT board A4 not receiving sweep ramp	J34-J; see waveforms Figure 5.11	A4, A5
16	SWP/OSC and DRAWER MALF indicators unlighted	STATUS READY indicator does not light	Remote "RF ON" not enabled	Determine that J3-G is connected to ground	Remote cable
17			Gate Q1 not activated	J34-D for +28 V	A4
				Q1 with transistor checker. ALL POWER OFF!	Replace Q1
18			Lamp voltage missing	J42-K for +28 V	A15
19			Lamps open	Lamps DS6-A and B	Replace lamps
20	STATUS READY indicator lighted. H BAND PA Circuit Breaker CB4 set to ON	H Band PA indicator DS4 does not light	Lamps open	Lamps DS4-A and B	Replace lamps
			Internal defects	CB4 for continuity. POWER OFF!	CB4
21		CB4 trips	Internal short circuit	Power amplifier A16 for short	A16 or cable

	CONDITIONS	INDICATION	POSSIBLE CAUSE	CHECK	REPAIR/ REPLACE
22	L BAND PA Circuit Breaker CB5 set to ON	L Band PA indicator DS5 does not light	Lamps open	Lamps DS5-A and B	Replace lamps
			Internal defects	CB5 for continuity. POWER OFF!	CB5
23		CB5 trips	Internal short circuit	Power amplifier A19 for short	A19 or cable
24	BAND MODE switch to H1, H2, H3, or H4. MODULATION switch set to OFF	OSC MALF indicator DS10 and/or DRAWER MALF indicator DS15 lighted	Power not reaching oscillator	J51 for proper input voltages	Replace cabling as necessary
			Oscillator faulty	J61 with power meter for output > +3 dBm	Replace A17 if faulty
25			Monitor circuit faulty	J34-4 for input ≈ + 0.5 VDC when oscillator is on	A17
26		Input at J34-4 ≈ +0.5 VDC	BIT card misadjusted or malfunctioning	Calibration of A4R37 per 5.3	A4
27	OSC MALF indicator DS10 not lighted	PA MALF indicator DS11 and/or DRAWER MALF indicator DS15 lighted	Normal indication that PA time delay has not elapsed	Wait 60 seconds or more for time delay to elapse	
28	Time delay has elapsed		Internal overload circuits tripped	Press S6 RESET, then release	
29		MALF indicators come on again	Power not reaching amplifier A16	J52 for proper voltages	Replace cabling as necessary
30			Power amplifier not enabled	For continuity between J52-E and J52-K	A15

CONDITIONS	INDICATIONS	POSSIBLE CAUSE	CHECK	REPAIR/ REPLACE
31	Oscillator output within specifications (line 24)	Oscillator output not reaching amplifier input	Cable between J61 and J61	Replace cable
32		Faulty power amplifier	Insert +3 dBm signal (mid-band freq) into J62; check J63 for output > 1 W	Replace A16
33	Amplifier output within specifications	Faulty RF components	Check J4 with power meter for ≈ 1 W	Replace isolator, harmonic filter, RF cables as required
34	Output at J4 within specifications	Faulty monitor circuit	Check rear panel J8 with power meter for ≈ +10 to +13 dBm	Directional detector/coupler
35	J8 output within specifications	BIT board A5 not receiving signal	J35-3 for ≈ +0.5 VDC	Directional detector/coupler
36	Input at J35-3 ≈ +0.5 VDC	BIT card misadjusted or malfunctioning	Calibration of A5R36 per para. 5.3	A5
37	LEVEL MALF indicator DS9 and/or DRAWER MALF indicator DS15 lights	Normal indication if leveler cable is disconnected	Connections at J5 and J54	
38	POWER ADJ INCR control set too high		Adjust control	

	CONDITIONS	INDICATIONS	POSSIBLE CAUSE	CHECK	REPAIR/ REPLACE
39	Leveler cable connected		Faulty leveling cable	Check cable continuity	Leveling cable
40	>1W RF at J73		Leveler output not reaching oscillator	Between J51-H and J51-L for ≈ 0.5V. Use differential oscilloscope or meter. Polarity of voltage unimportant.	Cabling as required
41		+ or - 0.5 V between J51-H and J51-L	Oscillator leveling circuits faulty	J35-F for zero	A17
42		Zero at J35-F	BIT card misadjusted or malfunctioning	Calibration of A5R40 per para. 5.3	A5
43	BAND MODE switch set to L. MODULATION switch to OFF	OSC MALF indicator DSDS13 and/or DRAWER MALF indicator DS15 lighted	Power not reaching oscillator	J81 for proper input voltages	Cabling as necessary
44			Oscillator faulty	J91 with power meter for output >+3 dBm	Replace A18 if faulty
45			Monitor circuit faulty	J35-B for input ≈ +0.5 VDC when oscillator is on	A18
46		Input at J34-B ≈ +0.5 VDC	BIT card misadjusted or malfunctioning	Calibration of A4R59 per para 5.3	A4
47	OSC MALF indicator DS13 not lighted	PA MALF indicator DS14 and/or DRAWER MALF indicator DS15 lighted	Power not reaching amplifier A19	J82 for proper voltages	Replace cabling as necessary

	CONDITIONS	INDICATION	POSSIBLE CAUSE	CHECK	REPAIR/ REPLACE
48			Power amplifier not enabled	For continuity between J82-C and J82-D	A15
49		Oscillator output within specifications (line 42)	Oscillator output not reaching amplifier	Cable between J91 and J92	Replace cable
50			Faulty power amplifier	Insert +3 dBm signal (mid-band freq) into J92; check J93 for output > 1 W	A19
51		Amplifier output within specifications	Faulty RF components	Check J6 with power meter for ≈ 1 W. Check J9 for +10 to +13 dBm	Replace directional coupler, cables as required
52		J6 and J9 outputs within specifications	Faulty monitor circuit	J35-4 for ≈ +0.5 VDC	A19, cabling as required
53		Input at J35-4 ≈ +0.5 VDC	BIT card misadjusted or malfunctioning	Calibration of A5R36 per para 5.3	A5
54		LEVEL MALF indicator DS12 and/or DRAWER MALF indicator DS15 lights	Normal indication if leveler cable is disconnected	Connections at J7 and J83	
55	Leveler cable connected	Power ADJ INCR. control set too high		Adjust control	
56			Faulty leveling cable	Check cable continuity	Leveling cable

	CONDITIONS	INDICATION	POSSIBLE CAUSE	CHECK	REPAIR/ REPLACE
57	>1 W RF at J98		Leveler output not reaching oscillator	Between J81-H and J81-L for 0.5 V. Use differential oscilloscope or meter. Polarity of voltage unimportant	Cabling as required
58		+ or - 0.5 V between J81-H and J81-L	Oscillator leveling circuits faulty	J35-H for zero	A17
59		Zero at J35-H	BIT card misadjusted or malfunctioning	Calibration of A5R40 per para 5.3	A5

	CONDITIONS	INDICATION	POSSIBLE CAUSE	CHECK	REPAIR/ REPLACE
57	>1 W RF at J98		Leveler output not reaching oscillator	Between J81-H and J81-L for 0.5 V. Use differential oscilloscope or meter. Polarity of voltage unimportant	Cabling as required
58		+ or - 0.5 V between J81-H and J81-L	Oscillator leveling circuits faulty	J35-H for zero	A17
59		Zero at J35-H	BIT card misadjusted or malfunctioning	Calibration of A5R40 per para 5.3	A5

J37-H INTERNAL 1 KHZ MODULATION
(MODULATION switch to INTERNAL)

2V/Div Coupling: DC
0.2 mS/Div Trigger: Int + Auto

J10 SWP OUT CONNECTOR
(SWEEP SELECT switch to .1; VERNIER to 1; TRIGGER switch to AUTO)

2V/Div Coupling: DC
20 mS/Div Trigger: Int + AC

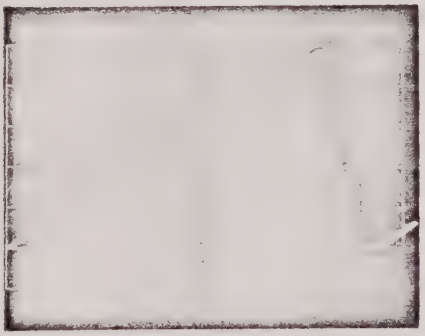

J10 SWP OUT CONNECTOR
(TRIGGER switch to AUTO)

2V/Div Coupling: DC
10 mS/Div Trigger: Int + AC

J10 SWP OUT CONNECTOR
(TRIGGER switch to LINE)

2V/Div Coupling: DC
20 mS/Div Trigger: Line + AC

J36-A LINE TRIGGER REFERENCE
(TRIGGER switch to LINE)

2V/Div Coupling: DC
5 mS/Div Trigger: Int + AC

J36-1 LINE TRIGGER TO S4
(TRIGGER switch to LINE)

2V/Div Coupling: DC
20 mS/Div Trigger: Int + AC

Figure 5.11 Waveforms (Sheet 1 of 3)

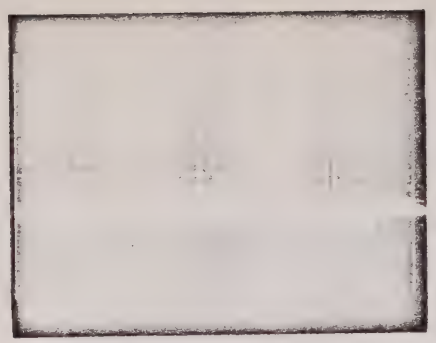

J36-D AUTO ZERO
(TRIGGER switch to EXT/MAN)

100 mV/Div Coupling: AC
5 mS/Div Trigger: Ext + AC (SWP OUT)

J36-F TRIGGER DISABLE
(TRIGGER switch to EXT/MAN)

10 mV/Div Coupling: AC
5 mS/Div Trigger: Ext + AC (SWP OUT)

J36-D AUTO ZERO
(TRIGGER switch to AUTO)

2V/Div Coupling: DC
20 mS/Div Trigger: Ext + AC (SWP OUT)

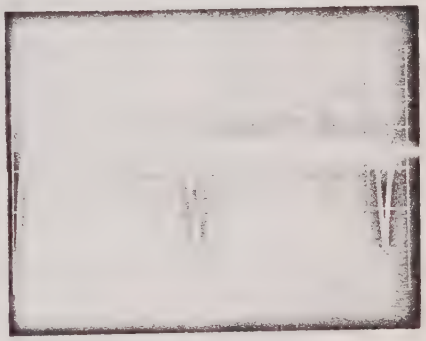

J36-F TRIGGER DISABLE
(TRIGGER switch to AUTO)

100 mV/Div Coupling: AC
20 mS/Div Trigger: Ext + AC (SWP OUT)

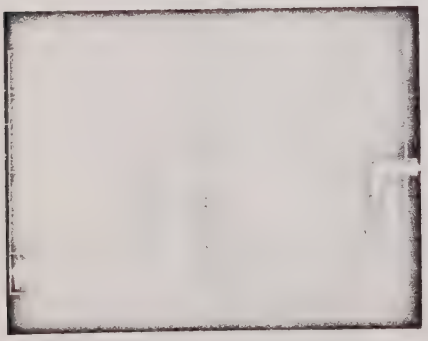

J36-D AUTO ZERO
(TRIGGER switch to LINE)

200 mV/Div Coupling: AC
20 mS/Div Trigger: Ext + AC (SWP OUT)

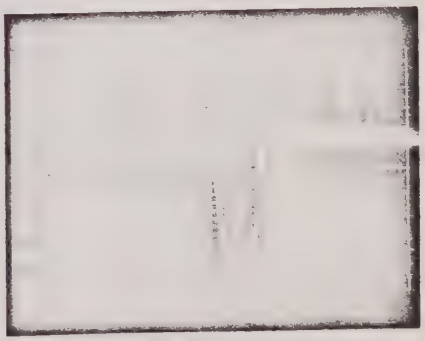

J36-F TRIGGER DISABLE
(TRIGGER switch to LINE)

100 mV/Div Coupling: AC
20 mS/Div Trigger: Ext + AC (SWP OUT)

Figure 5.11 Waveforms (Sheet 2 of 3)

SECTION 6

DRAWINGS AND PARTS LISTS

6.1 SCHEMATIC DIAGRAMS

Schematic and wiring diagrams for the Model 506 Microwave Signal Source are arranged in the following order:

Figure 6.1	Model 506 Signal Source Block Diagram	Page 6-2
Figure 6.2	Model 506 Chassis Schematic Diagram	Page 6-3/4
Figure 6.3	A20 Power Supply and A8 Regulator Schematic Diagram	Page 6-5
Figure 6.4	A2 Trigger Sweep Schematic Diagram	Page 6-6
Figure 6.5	A3 Operational Amplifier Schematic Diagram	Page 6-7
Figure 6.6	A4 Built-in-test #1 Schematic Diagram	Page 6-8
Figure 6.7	A5 Built-in-test #2 Schematic Diagram	Page 6-9
Figure 6.8	A6 Trigger Holdoff Schematic Diagram	Page 6-10
Figure 6.9	A7 Reset Schematic Diagram	Page 6-11
Figure 6.10	A15 Frequency Set Schematic Diagram	Page 6-12
Figure 6.11	A17 High Band Oscillator Schematic Diagram	Page 6-13
Figure 6.12	A18 Low Band Oscillator Schematic Diagram	Page 6-14

6.2 ASSEMBLY DRAWINGS AND PARTS LISTS

Printed Circuit Board Assembly drawings and parts lists are arranged in the following order:

Figure 6.13	A8 Regulator Board Assembly	Page 6-15
Figure 6.14	A2 Trigger Sweep Board Assembly	Page 6-16
Figure 6.15	A3 Operational Amplifier Board Assembly	Page 6-17
Figure 6.16	A4 Built-in-test #1 Board Assembly	Page 6-18
Figure 6.17	A5 Built-in-test #2 Board Assembly	Page 6-19
Figure 6.18	A6 Trigger Holdoff Board Assembly	Page 6-20
Figure 6.19	A7 Reset Board Assembly	Page 6-21
Figure 6.20	A15 Frequency Set Board Assembly	Page 6-22
Figure 6.21	A9 Extender Board Assembly	Page 6-23/24

6.3 REPLACEMENT PARTS

Most parts used in the 506 are special items, and must be obtained from Kruse Electronics. The majority of parts used on the printed circuit boards are standard items, available locally. To order replacement parts, write to Kruse Electronics at the address shown on the title page of this manual. Be sure to include the model (506) and serial number of the unit for which parts are required. Be sure to include the complete reference designation for all parts ordered. For example, capacitor C5 on printed circuit board A5 is "506A5C5".

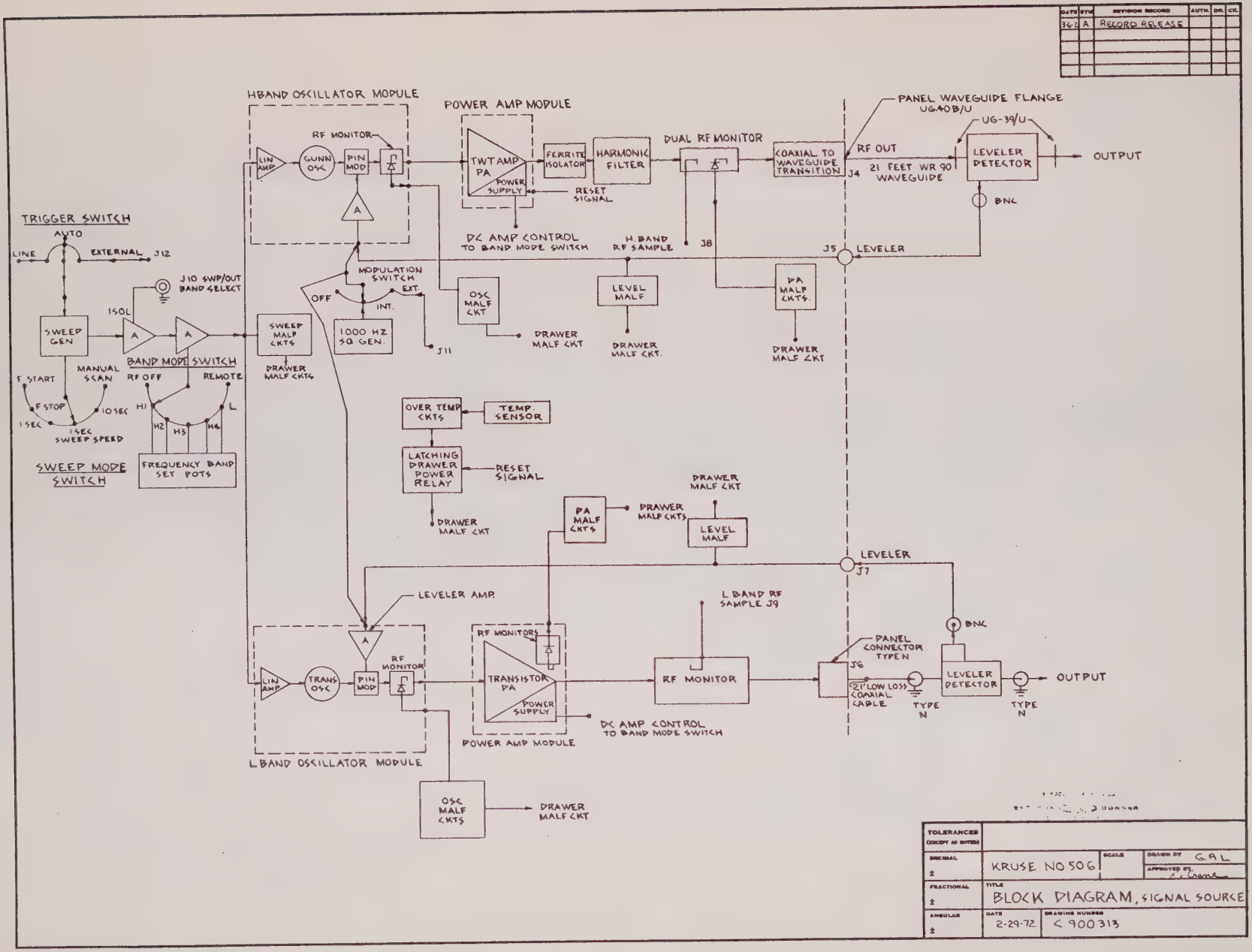

Figure 6.1 Model 506 Signal Source Block Diagram

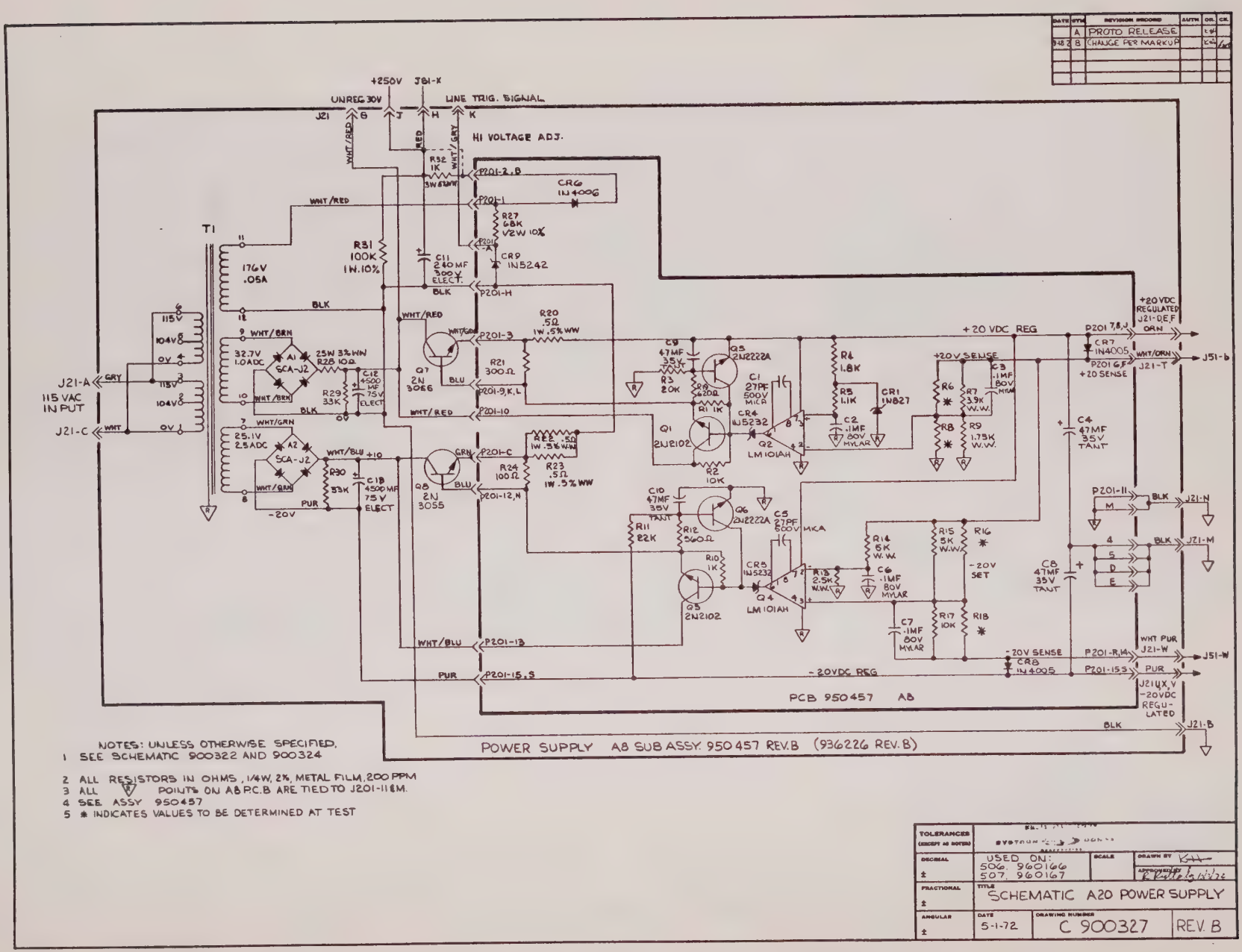

NOTES: UNLESS OTHERWISE SPECIFIED,
1 SEE SCHEMATIC 900322 AND 900324
2 ALL RESISTORS IN OHMS, 1/4W, 2%, METAL FILM, 200 PPM
3 ALL ▽ POINTS ON A8 P.C.B ARE TIED TO J201-11&M.
4 SEE ASSY 950457
5 * INDICATES VALUES TO BE DETERMINED AT TEST

DATE	BY	REVISION RECORD	AUTH	OD.	CK.
	A	PROTO RELEASE			
9-15-72	B	CHANGE PER MARKUP			

TOLERANCES (EXCEPT AS NOTED)	SYSTRON DONNER		
DECIMAL ±	USED ON: 506, 960166 507, 960167	SCALE	DRAWN BY
FRACTIONAL ±	TITLE SCHEMATIC A20 POWER SUPPLY		
ANGULAR ±	DATE 5-1-72	DRAWING NUMBER C 900327	REV. B

Figure 6-3. A20 Power Supply and A8 Regulator Schematic Diagram

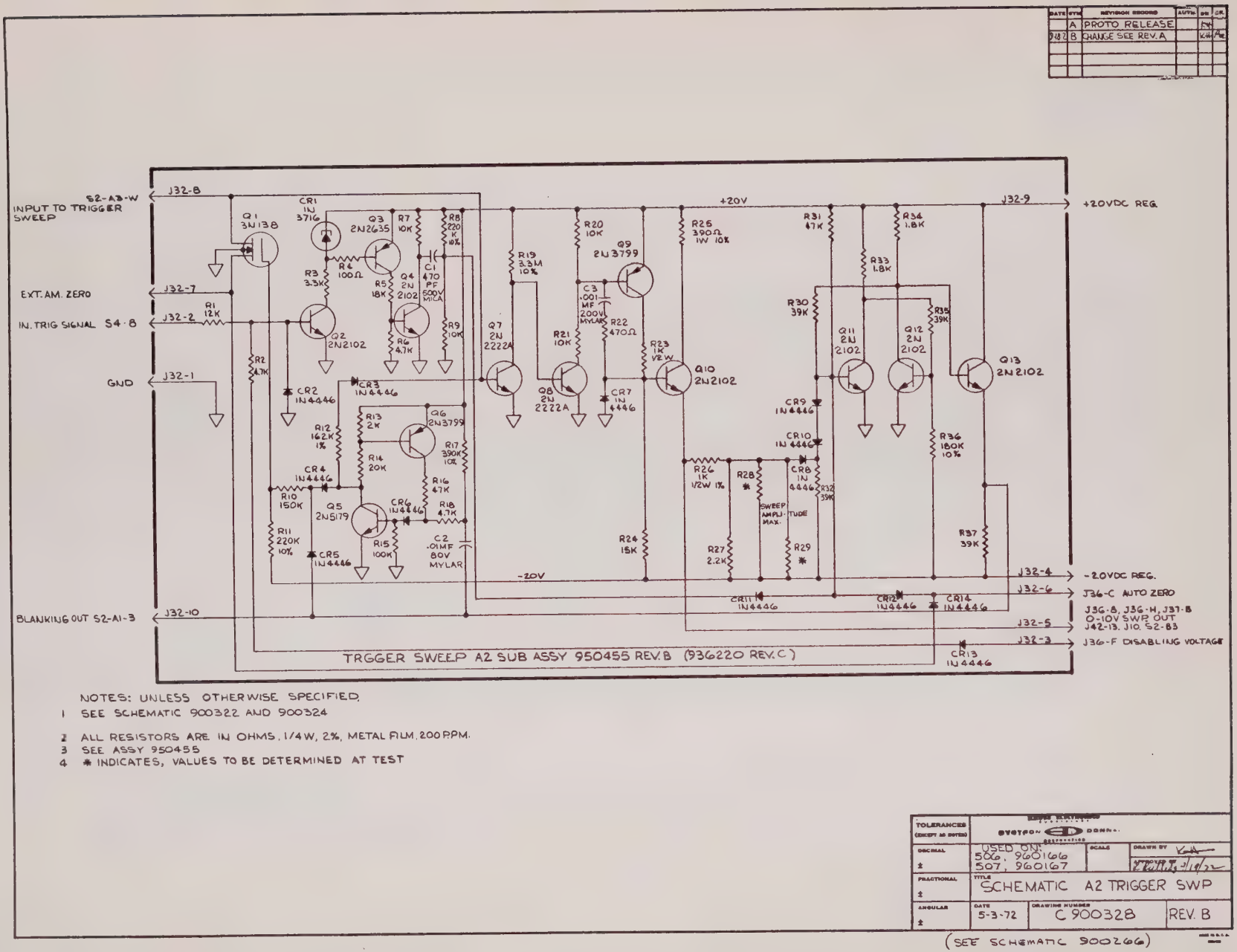

NOTES: UNLESS OTHERWISE SPECIFIED.

1 SEE SCHEMATIC 900322 AND 900324

2 ALL RESISTORS ARE IN OHMS, 1/4W, 2%, METAL FILM, 200 P.P.M.

3 SEE ASSY 950455

4 * INDICATES, VALUES TO BE DETERMINED AT TEST

TOLERANCES (EXCEPT AS NOTED)	BYSTRON DORR
DECIMAL ±	USED ON: 506, 960166; 507, 960167
FRACTIONAL ±	SCALE
ANGULAR ±	DRAWN BY
TITLE	SCHEMATIC A2 TRIGGER SWP
DATE	5-3-72
DRAWING NUMBER	C 900328 REV. B

(SEE SCHEMATIC 900266)

Figure 6.4 A2 Trigger Sweep Schematic Diagram

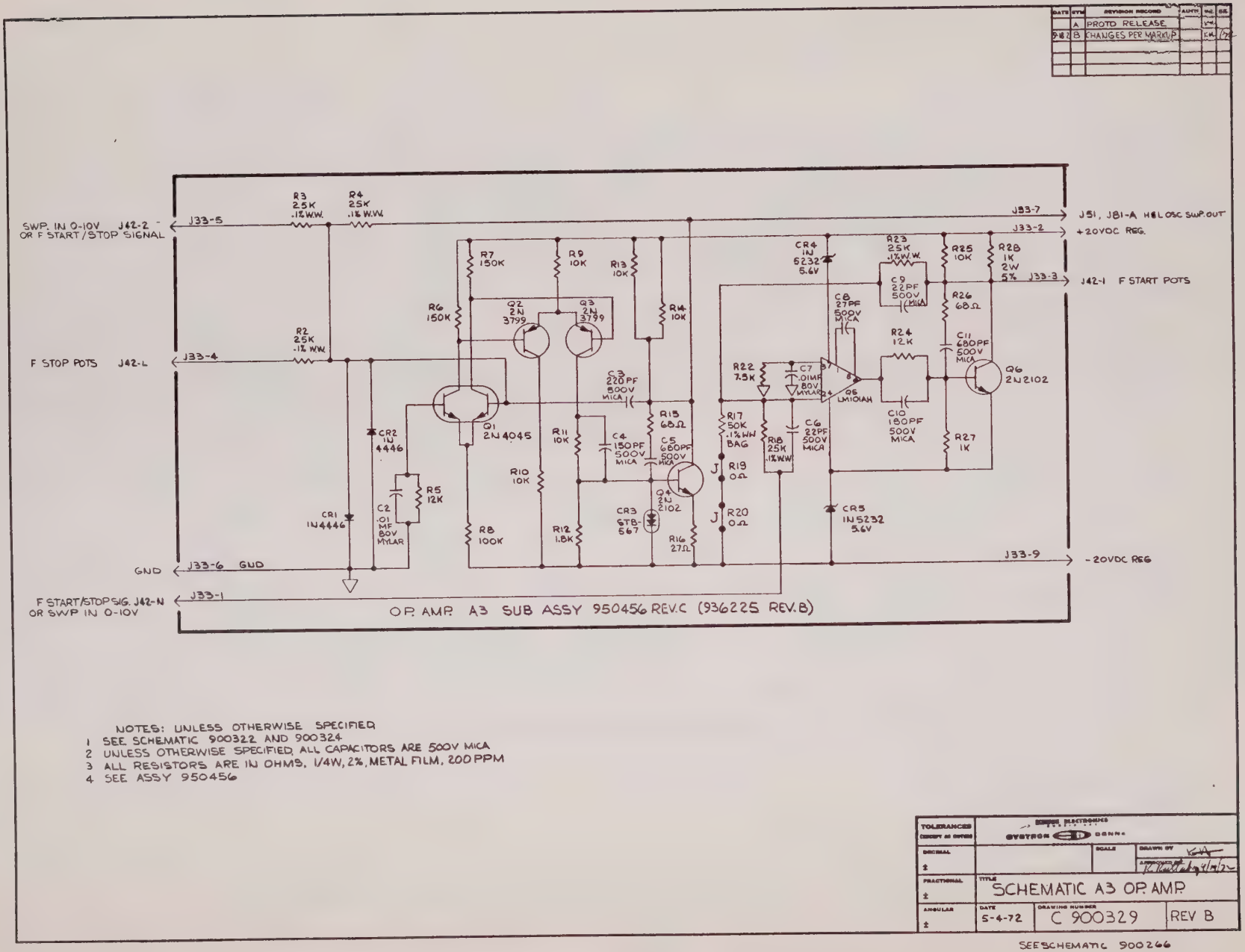

Figure 6.5 A3 Operational Amplifier Schematic Diagram

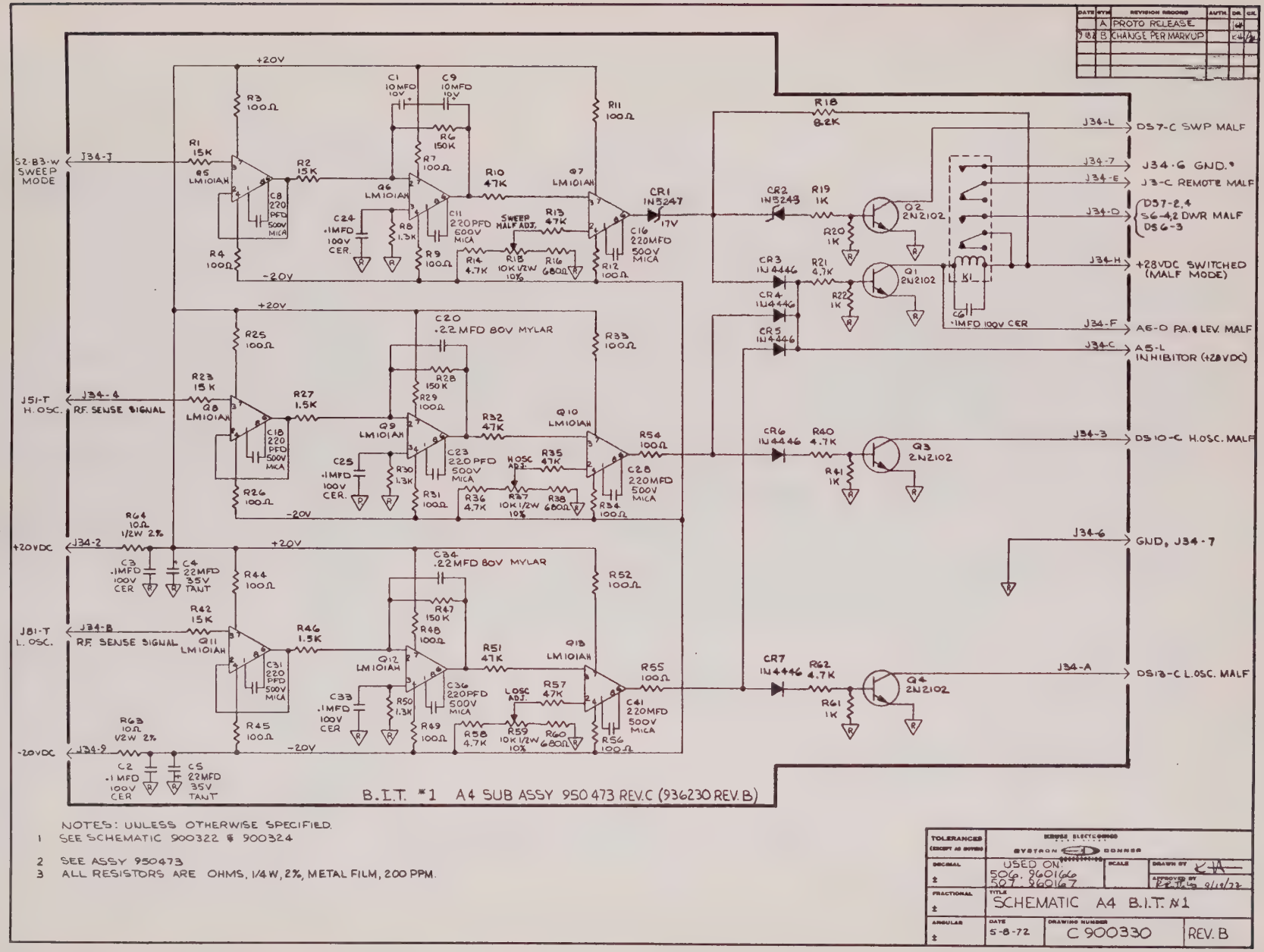

Figure 6.6 A4 Built-in-test #1 Schematic Diagram

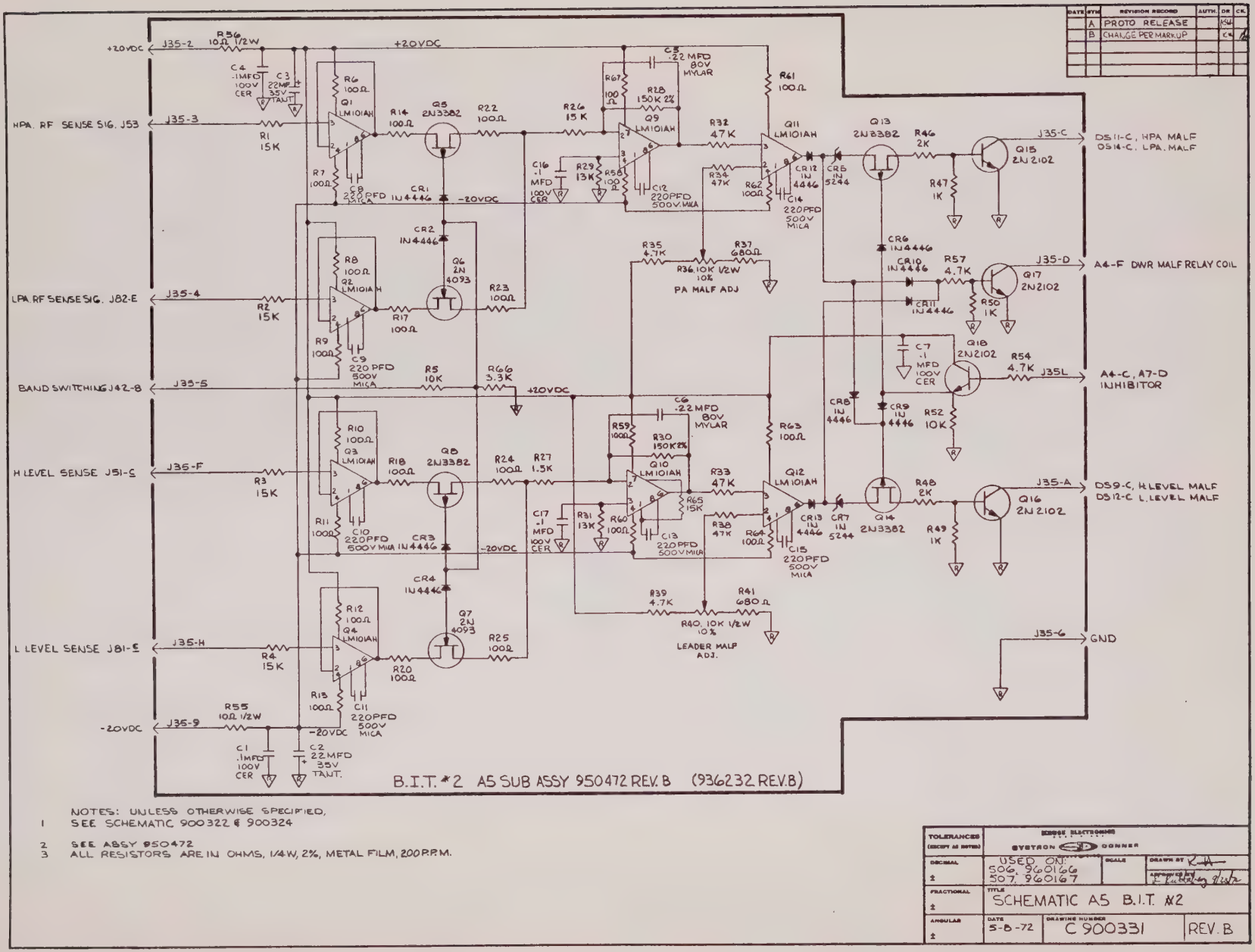

Figure 6.9 A5 Built-in-test #2 Schematic Diagram

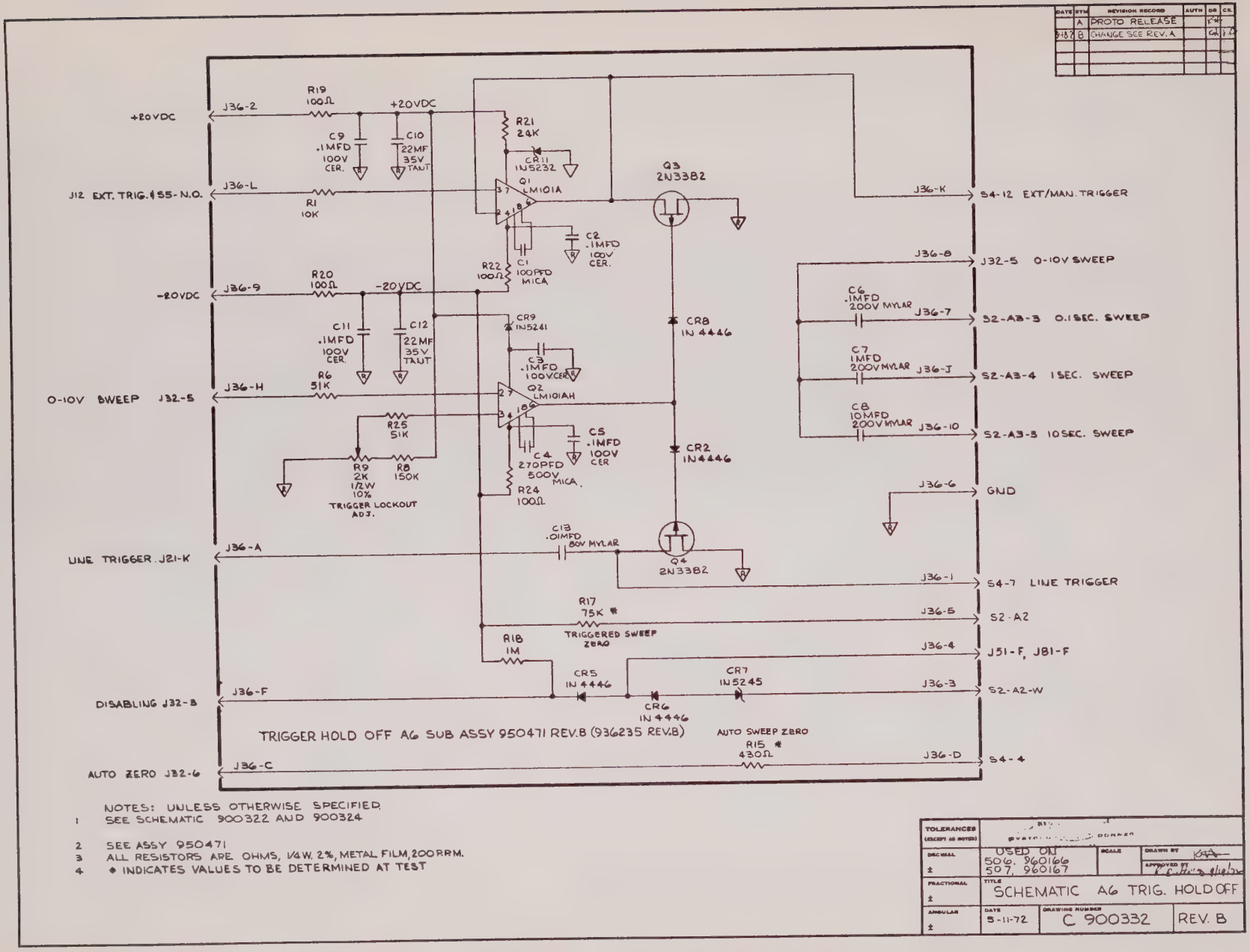

Figure 6.8 A6 Trigger Holdoff Schematic Diagram

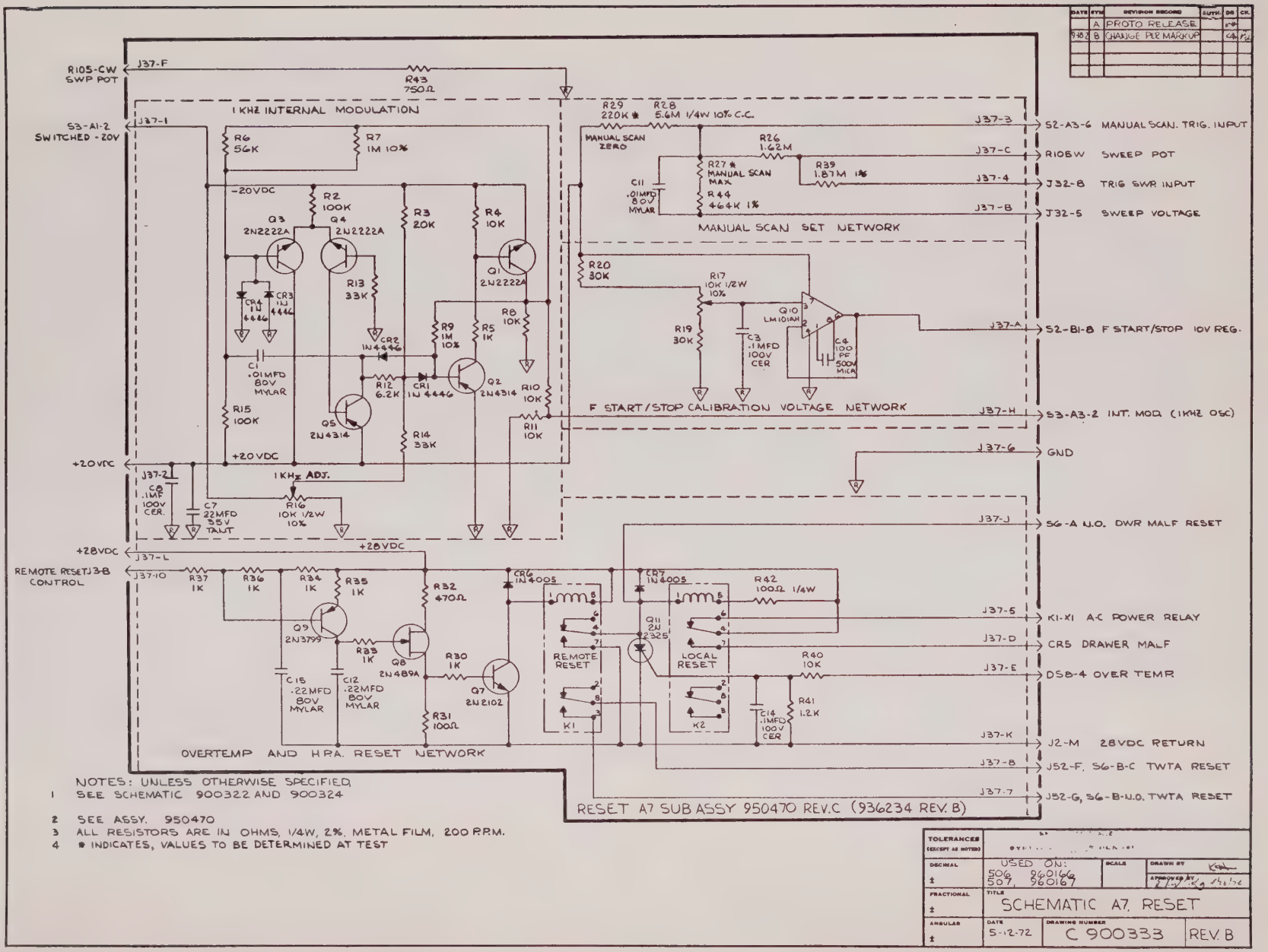

Figure 6.9 A7 Reset Schematic Diagram

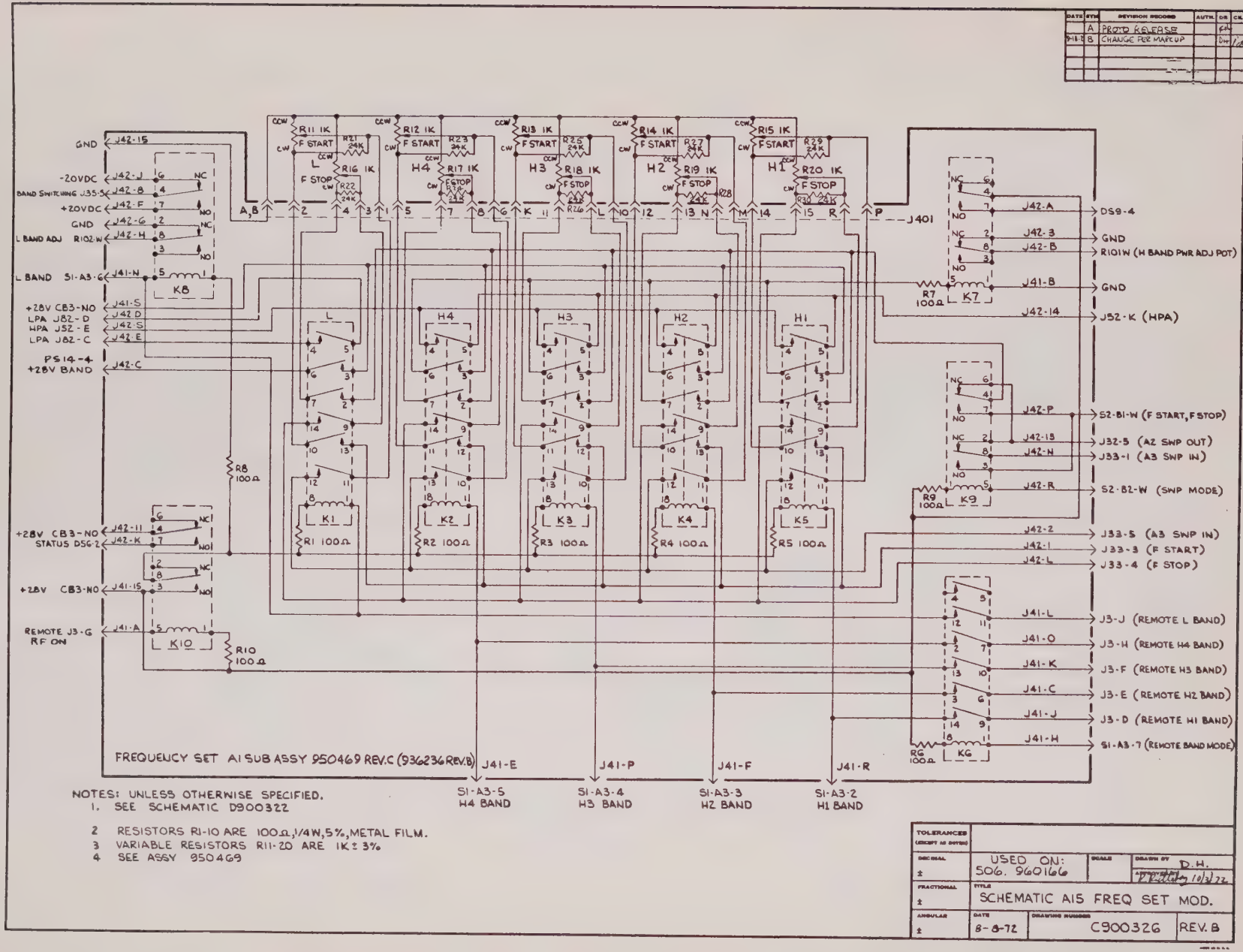

Figure 6.10 A15 Frequency Set Schematic Diagram

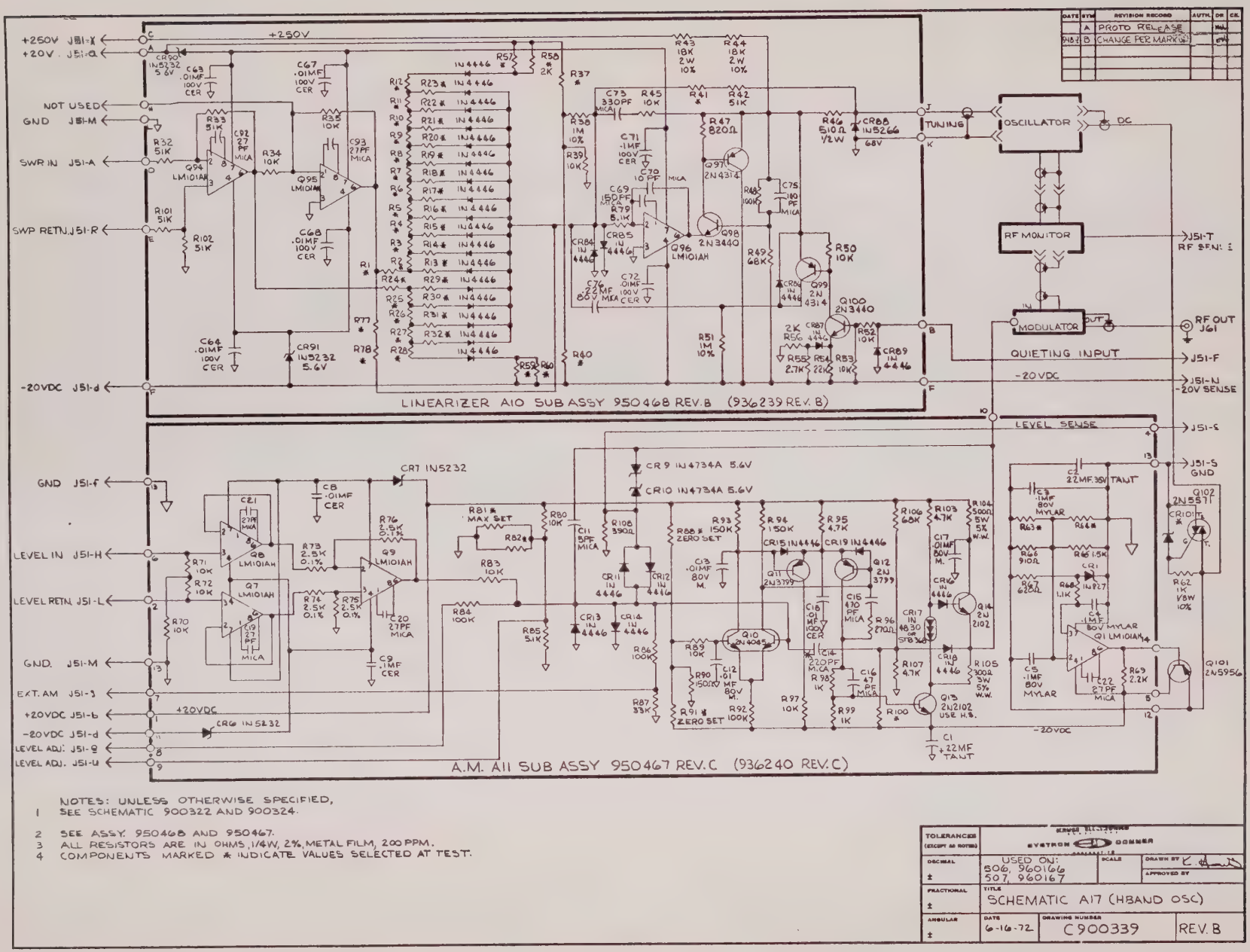

NOTES: UNLESS OTHERWISE SPECIFIED,
1 SEE SCHEMATIC 900322 AND 900324.

2 SEE ASSY. 950468 AND 950467.
3 ALL RESISTORS ARE IN OHMS, 1/4W, 2%, METAL FILM, 200 PPM.
4 COMPONENTS MARKED * INDICATE VALUES SELECTED AT TEST.

Figure 6.11 A17 High Band Oscillator Schematic Diagram

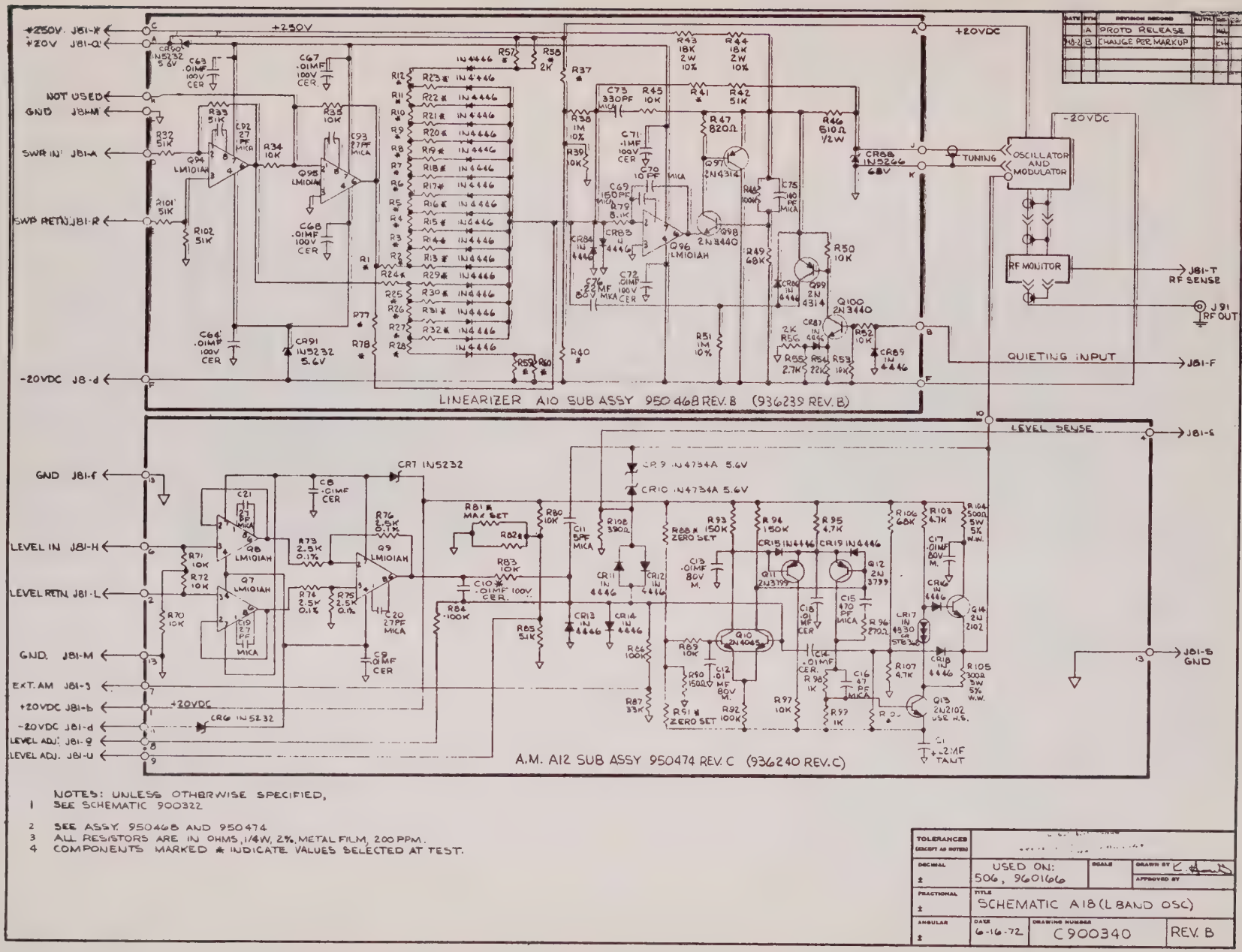

NOTES: UNLESS OTHERWISE SPECIFIED,
1 SEE SCHEMATIC 900322

2 SEE ASSY. 950468 AND 950474
3 ALL RESISTORS ARE IN OHMS, 1/4W, 2%, METAL FILM, 200 PPM.
4 COMPONENTS MARKED * INDICATE VALUES SELECTED AT TEST.

TOLERANCES (EXCEPT AS NOTED)			
DECIMAL ±	USED ON: 506, 9601666	SCALE	DRAWN BY
FRACTIONAL ±	TITLE: SCHEMATIC A18 (L BAND OSC)		APPROVED BY
ANGULAR ±	DATE 6-16-72	DRAWING NUMBER C900340	REV. B

Figure 6.12 A18 Low Band Oscillator Schematic Diagram

DATE	SYM	REVISION RECORD	AUTH.	DR.	CK.
3-13-72	B	PROTO RELEASE		LK	

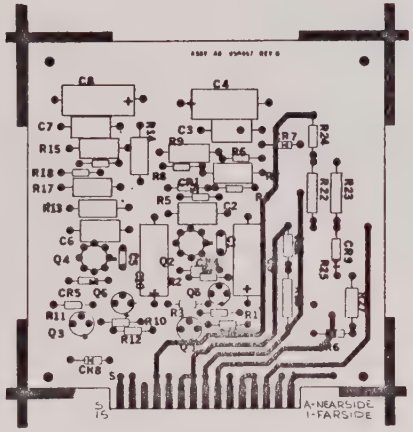

REF. DES	QTY	PART NO.	DESCRIPTION
Q5,6	2	485070	TRANSISTOR, 2N2222A
Q2,4	2	480687	I.C. LM 101AH
	2	480752	TRANSISTOR PAD
Q1,3	2	485004	TRANSISTOR, 2N2102
CR9	1	480057	DIODE IN 5242
CR7,8	2	480003	" IN 4005
CR4,5	2	480041	" IN5232 5.6V
CR1	1	480011	" IN827
CR6	1	480042	DIODE IN4006
R27	1	475760	RESISTOR, FIXED COMP 68K 1/2W 10%
R20,22,23	3	477000	WIRE W. .5Ω 1W 5%
R17	1	476984	10K 1/4W 1%
R14,15	2	476983	5K 1/4W 1%
R7	1	476981	3.9K 1/4W 1%
R9	1	476971	1.73K 1/4W 1%
R13	1	476560	WIRE W. 2.5K 1/4W .1%
R6,8,16,18	4		FACTOR SELECT
R24	1	471408	METAL FILM 100Ω 1/4W 2%
R21	1	471419	300Ω 1/4W 2%
R11	1	471464	22K 1/4W 2%
R3	1	471463	20K 1/4W 2%
R2	1	471456	10K 1/4W 2%
R4	1	471438	1.8K 1/4W 2%
R5	1	471433	1.1K 1/4W 2%
R1,10	2	471432	1K 1/4W 2%
R19	1	471427	620Ω 1/4W 2%
R12	1	471426	RESISTOR, METAL FILM 560Ω 1/4W 2%
C4,8,9,10	4	152761	CAP. TANT. 47 MFD 35V
C2,3,6,7	4	157005	CAP. MYLAR .1MFD 80V
C1,5	2	155470	CAP. MICA 27 PF 500V
A8	1	936226	PRINTED CIRCUIT BOARD

LIST OF MATERIAL

NOTES:
1. ASSEMBLE USING ML 950457
2. SEE SCHEMATIC 900327
3. SOLDER USING SN60 PER QQ-S-571
4. COAT BOARD WITH MOISTURE AND FUNGUS RESISTIVE COAT PER MIL-I-46058

TOLERANCES (EXCEPT AS NOTED)	KINGS ELECTRONICS SYSTRON DONNER	
DECIMAL ±	NEXT ASSY 950512	SCALE 1:1
FRACTIONAL ±	TITLE P.C.B. POWER SUPPLY ASSY. A8	
ANGULAR ±	DATE 3-13-72	DRAWING NUMBER C950457 REV. C

Figure 6.13 A8 Regulator Board Assembly

DATE	BY#	REVISION RECORD	AUTH	QR	C.R.
5/7	B	PROTO RELEASE		104	

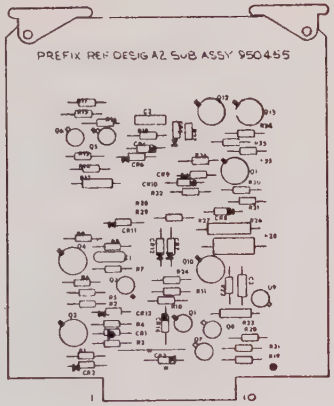

REF. DES.	QTY	PART NO	DESCRIPTION	ITEM
				44
				43
	6	480752	TRANSISTOR PAD	42
				41
Q2,4,10,11,12,13	6	485004	TRANSISTOR 2N2102	40
Q7,8	2	48-04	2N2222A	39
Q6,9	2	48-05	2N3799	38
Q5	1	485049	2N5179	37
Q3	1	485005	2N2635	36
Q1	1	485047	TRANSISTOR FET 3N138	35
				34
CR2-14	13	480004	DIODE IN4446	33
CR1	1	480014	DIODE IN3716	32
				31
C1	1	155515	CAPACITOR 470PFD 500V MICA	30
C2	1	157002	" .01MFD 80V MYLAR	29
C3	1	157010	CAPACITOR .001MFD 200V MYLAR	28
R28,29	2		RESISTOR FACTORY SELECT	27
R36	1	475650	RESISTOR 180K 1/4W 10% C.C.	26
R33,34	2	471438	1.8K 1/4W 2% M.F.	25
R30,32,35,37	4	471470	39K 1/4W 2% M.F.	24
R27	1	471440	2.2K 1/4W 2% M.F.	23
R26	1	470618	1K 1/2W 1% M.F.	22
R25	1	475825	390Ω 1W 10% C.C.	21
R24	1	471460	15K 1/4W 2% M.F.	20
R23	1	472220	1K 1/2W 2% M.F.	19
R22	1	471424	470Ω 1/4W 2% M.F.	18
R19	1	475682	3.3M 1/4W 10% C.C.	17
R17	1	475659	390K 1/4W 10% C.C.	16
R16,31	2	471472	47K 1/4W 2% M.F.	15
R15	1	471480	100K 1/4W 2% M.F.	14
R14	1	471463	20K 1/4W 2% M.F.	13
R13	1	471439	2K 1/4W 2% M.F.	12
R12	1	470039	162K 1/4W 1% M.F.	11
R10	1	471484	150K 1/4W 2% M.F.	10
R8,11	2	475652	220K 1/4W 10% C.C.	9
R7,9,20,21	4	471456	10K 1/4W 2% M.F.	8
R5	1	471462	18K 1/4W 2% M.F.	7
R4	1	471408	100Ω 1/4W 2% M.F.	6
R3	1	471444	3.3K 1/4W 2% M.F.	5
R2,6,18	3	471448	4.7K 1/4W 2% M.F.	4
R1	1	471458	RESISTOR 12K 1/4W 2% M.F.	3
	2	28-02	EJECTOR, SCANBE S202	2
	1	936220	PRINTED CIRCUIT BOARD	1

LIST OF MATERIAL

NOTES:
1. ASSEMBLE USING ML 950455
2. SEE SCHEMATIC 900328
3. SOLDER USING SN60 PER QQ-S-571
4. COAT BOARD WITH MOISTURE AND FUNGUS RESISTIVE COAT PER MIL-I-46058

TOLERANCES (EXCEPT AS NOTED)	UNLESS DIGIT SHOWN SYSTRON DONNER		
DECIMAL ±	NEXT ASSY 506: 948268 507: 948270	SCALE 1:1	DRAWN BY APPROVED BY
FRACTIONAL ±	TITLE P.C.B. TRIGGER SWEEP ASSY. A2		
ANGULAR ±	DATE 3-29-72	DRAWING NUMBER C 950455	REV. B

Figure 6.14 A2 Trigger Sweep Board Assembly

DATE	SYM	REVISION RECORD	AUTH	DR	CK
3-28-72	B	PROTO RELEASE		KM	
9-13-72	C	CHANGE SEE REV B		KM	

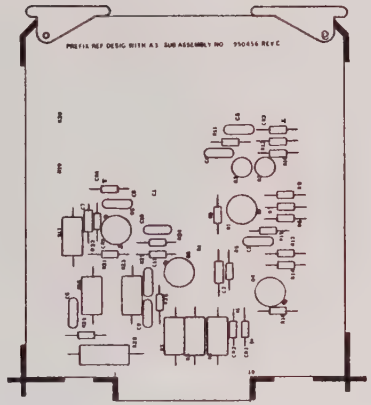

REF. DES	QTY	PART NO	DESCRIPTION	ITEM
				43
				42
				41
				40
				39
				38
	2	480752	TRANSISTOR PAD	37
				36
Q5	1	48-11	I.C. LM101AH	35
Q4,6	2	485004	TRANSISTOR 2N2102	34
Q2,3	2	48-05	" 2N3799	33
Q1	1	485014	TRANSISTOR 2N4045	32
				31
CR4,5	2	480041	DIODE 1N5232 5.6V	30
CR3	1	480037	" STB-567	29
CR1,2,	2	480004	DIODE 1N4446	28
				27
C8	1	155470	CAPACITOR 27 PFD 500V 5%	26
				25
C6,9	2	155467	22 PFD 500V 5%	24
C5,11	2	155530	680 PFD 500V 5%	23
C4,10	2	155500	150 PFD 500V 5%	22
C3	1	155508	220 PFD 500V 5%	21
C2,7	2	157002	CAPACITOR .01 MFD 80V MYLAR	20
				19
				18
R28	1	47-01	RESISTOR 1K 2W 5% C.C.	17
R27	1	471432	1K 1/4W 2% M.F.	16
R22	1	471453	7.5K 1/4W 2% M.F.	15
R17	1	476570	50K 1/4W .1 W.W.	14
				13
				12
R16	1	470705	27Ω 1/8W 2% M.F.	11
R15,26	2	471404	68Ω 1/4W 2% M.F.	10
R12	1	471438	1.8K 1/4W 2% M.F.	9
R8	1	471480	100K 1/4W 2% M.F.	8
R9,10,11,13,14,25	6	471456	10K 1/4W 2% M.F.	7
R6,7	2	471484	150K 1/4W 2% M.F.	6
R5,24.	2	471458	12K 1/4W 2% M.F.	5
R2,3,4,18,23	5	476565	RESISTOR 25K 1/4W .1% W.W.	4
				3
	2	28-03	EJECTOR, SCANBE S202	2
	1	936225	PRINTED CIRCUIT BOARD	1

LIST OF MATERIAL

TOLERANCES (EXCEPT AS NOTED)	SYSTRON DONNER		
DECIMAL ±	NEXT ASSY 506 948268 507 948270	SCALE 1:1	DRAWN BY / APPROVED BY
FRACTIONAL ±	TITLE P.C.B. OP. AMP. ASSY A3		
ANGULAR ±	DATE 3-28-72	DRAWING NUMBER C950456	REV. C

NOTES:

1 ASSEMBLE USING ML 950456
2 SEE SCHEMATIC 900329
3 UNLESS OTHERWISE SPECIFIED, ALL CAPACITORS ARE 500V MICA
4 SOLDER USING SN60 PER QQ-S-571
5 COAT BOARD WITH MOISTURE AND FUNGUS RESISTIVE COAT PER MIL-I-46058

Figure 6.15 A3 Operational Amplifier Board Assembly

DATE	SYM	REVISION RECORD	AUTH	DR	CK
3-6-2	A	PROTO RELEASE		KA	
3-8-2	B	PROTO RELEASE		KA	
[illegible]	C	CHANGED, SEE REV B		KA	[illegible]

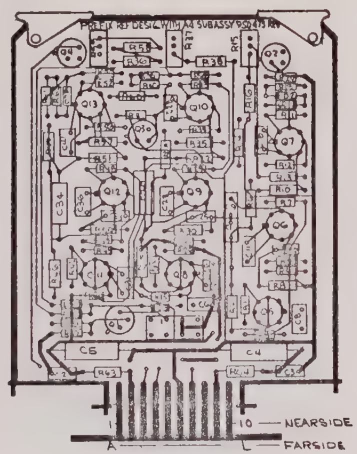

COMPONENT SIDE SHOWN

NOTES:
1 ASSEMBLE USING ML 950473
2 SEE SCHEMATIC 900330
3 SEE WIRING DIAGRAM 900323 AND 900325
4 SOLDER USING SN60 PER QQ-S-571

5 COAT BOARD WITH MOISTURE AND FUNGUS RESISTIVE COAT PER MIL-I-46058

REF. DESIG.	QTY	PART NO.	DESCRIPTION	ITEM
	4	480752	TRANSISTOR PAD	28
	1	28-01	RELAY PAD	27
				26
CR1	1	480071	DIODE 1N5247	25
CR2	1	480063	" 1N5243	24
K1	1	45-01	RELAY BR26-700A1-26V BABCOCK	23
Q5 THRU 13	9	48-11	I.C. LM101AH	22
Q1 THRU 4	4	485004	TRANSISTOR 2N2102	21
CR3 THRU 7	5	480004	DIODE 1N4446	20
C4,5	2	154002	CAPACITOR 22MFD 35V TANT	19
C2,3,6,24,25,33	6	150920	CAPACITOR .1MFD 100V CER	18
C8,11,16,18,23 C28,31,36,41	9	155508	CAPACITOR 220PFD 500V MICA	17
C9,1	2	15-03	CAPACITOR 10MFD 10V DICKSON	16
C20,34	2	157020	CAPACITOR .22MFD 80V MYLAR	15
R3,4,7,9,11,12,25 R26,31,33,34,44 R45,48,49,52,56 R54,29,55	20	471408	RESISTOR 100Ω 1/4W 2%	14
R15,37,59	3	47-03	POTENTIOMETER 10K	13
R16,38,60	3	471428	RESISTOR 680Ω 1/4W 2%	12
R14,21,36,40,58,62	6	471448	RESISTOR 4.7K 1/4W 2%	11
R63,64	2	471994	RESISTOR 10Ω 1/2W 2%	10
R28,6,47	3	471484	RESISTOR 150K 1/4W 2%	9
R20,41,61,22,19	5	471432	RESISTOR 1K 1/4W 2%	8
R10,13,32,35,51,57	6	471472	RESISTOR 47K 1/4W 2%	7
R1,2,23,42	4	471460	RESISTOR 15K 1/4W 2%	6
R8,50,30	3	471435	RESISTOR 1.3K 1/4W 2%	5
R18	1	471454	RESISTOR 8.2K 1/4W 2%	4
R27,46	2	471436	RESISTOR 1.5K 1/4W 2%	3
	2	28-02	EJECTOR, SCANBE S202	2
	1	936230	PRINTED CIRCUIT BOARD	1

LIST OF MATERIAL

TOLERANCES (EXCEPT AS NOTED)	SYSTRON DONNER		
DECIMAL ±	NEXT ASSY 506, 948268 507, 948270	SCALE 1:1	DRAWN BY [illegible] APPROVED BY [illegible]
FRACTIONAL ±	TITLE P.C.B. B.I.T. #1 ASSY. A4		
ANGULAR ±	DATE 2-9-72	DRAWING NUMBER C950473	REV. C

Figure 6.16 A4 Built-in-test #1 Board Assembly

DATE	SYM	REVISION RECORD	AUTH	LIR	C.N.
9-12	A	PROTO RELEASE		DM	
9-26-2	B	PROTO RELEASE		DM	

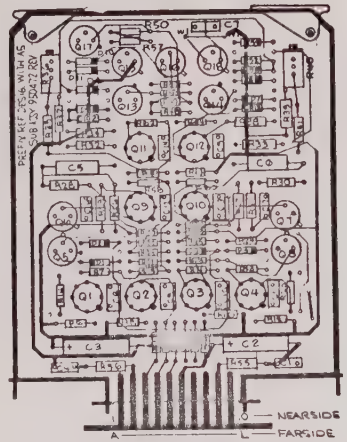

COMPONENT SIDE SHOWN

NOTES:

1. ASSEMBLE USING ML 950472
2. SEE SCHEMATIC 900331
3. SEE WIRING DIAGRAM
4. SOLDER USING SN60 PER QQ-S-571
5. COMPONENT SIDE SHOWN.
6. COAT BOARD WITH MOISTURE AND FUNGUS RESISTIVE COAT PER MIL-I-46058

REF DESIG	QTY	PART NO.	DESCRIPTION
	4	480752	TRANSISTOR PAD
R36, 40	2	47-03	POT. 10K 10%
R60,61,62,63,64,27,13,24,25,67,58,59,18,14,17,20,22,23,R6,7,8,9,10,11,12	24	471408	RESISTOR 100Ω 1/4W 2%
R47, 49, 50	3	471432	1K 1/4W 2%
R57, 35, 39, 54	4	471448	4.7K 1/4W 2%
R34, 38, 32, 33	4	471472	47K 1/4W 2%
R37, 41	2	471428	680Ω 1/4W 2%
R66	1	471444	3.3K 1/4W 2%
R5, 52	2	471456	10K 1/4W 2%
R29, 31	2	471459	13K 1/4W 2%
R46, 48	2	471439	2K 1/4W 2%
R1,2,3,4,26,65	6	471460	15K 1/4W 2%
R28, 30	2	471484	150K 1/4W 2%
R55, 56	2	471994	10Ω 1/2W 2%
R27,		471436	RESISTOR 1.5K 1/4W 2%
	2	28-02	EJECTOR, SCANBE S202
	1	936232	PRINTED CIRCUIT BOARD
CR5,7	2	480064	DIODE IN 5244
C8-15	8	155508	CAPACITOR(220PF 500V) MICA
C5, C6	2	157020	CAPACITOR(.22 MFD 80V) MYLAR
C2, C3	2	154002	CAPACITOR(22 MFD 35V) TANT
C1, 4, 7, 16, 17	5	150920	CAPACITOR(.1 MFD 100V) CERAMIC
CR1-4, 6, 8, 12, 13, 9, 10, 11	11	480004	DIODE IN 4446
Q15, Q16 Q17, Q18	4	485004	TRANSISTOR, 2N2102
Q6, Q7	2	48-07	TRANSISTOR 2N4093
Q5, Q8, Q13, Q14	4	48-06	TRANSISTOR 2N3382
Q1, Q2, Q3, Q4 Q9, Q10, Q11, Q12	8	48-11	OP AMP LM101AH

MATERIAL LIST

TOLERANCES (EXCEPT AS NOTED)	SYSTRON DONNER		
DECIMAL ±	NEXT ASSY 506, 950506 507, 950507	SCALE 1:1	OMEGA TECH
FRACTIONAL ±	TITLE P.C.B. B.I.T. #2 ASSY. A5		
ANGULAR ±	DATE	DRAWING NUMBER C950472	REV. B

Figure 6.17 A5 Built-in-test #2 Board Assembly

DATE	BY	REVISION RECORD	AUTH	OR	CK
5-6-72	A	PROTO RELEASE		KW	
8-28-72	B	CHANGE SEE REV A.		KW	

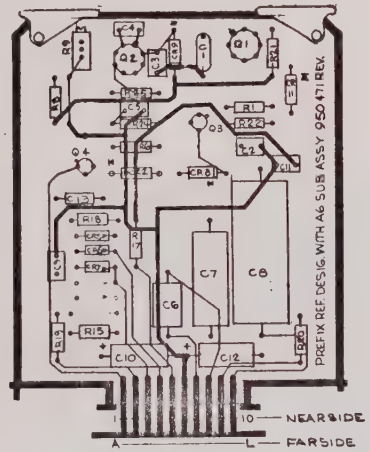

COMPONENT SIDE SHOWN

REF DES	QTY	PART NO	DESCRIPTION	ITEM
	1	936235	PRINTED CIRCUIT BOARD	1
	2	28-02	EJECTOR, SCANBE S202	2
R6,25	2	471473	RESISTOR 51K 1/4W 2% M.F.	3
R1	1	471456	10K 1/4W 2% M.F.	4
R19,20,22,24	4	471408	100Ω 1/4W 2% M.F.	5
R8	1	471484	150K 1/4W 2% M.F.	6
R18	1	475678	1M 1/4W, 10% C.C.	7
R21	1	471465	24K 1/4W 2% M.F.	8
R15	1	471423	430Ω 1/4W 2% M.F.	9
				10
R17	1	471477	RESISTOR 75K 1/4W 2% M.F.	11
				12
R9	1	47-04	POT 2K 10% RJ24CX202K	13
				14
Q1,2	2	48-11	I.C. LM101AH	15
Q3,4	2	48-06	TRANSISTOR 2N3382	16
C13	1	157002	CAPACITOR .01MFD 80VMYLAR	17
C2,3,5,9,11	5	150920	.1MFD 100V CER	18
C4	1	155509	270PFD 500V MICA	19
C6	1	157801	.1MFD 200V MYL	20
C7	1	157802	1.0MFD 200V MYL	21
C8	1	157803	10MFD 100V MYLAR	22
C10,12	2	154002	22MFD 35V TANT	23
C1	1	155490	CAPACITOR 100PFD 500V MICA	24
				25
				26
CR9	1	480054	DIODE 1N5241B	27
CR7	1	480065	" 1N5248	28
CR5,6,8,2	4	480004	" 1N4446	29
CR11	1	480041	DIODE 1N5232	30
				31
				32
				33

LIST OF MATERIAL

NOTES:

1. ASSEMBLE USING ML 950471
2. SEE SCHEMATIC 900332
3. SOLDER USING SN60 PER QQ-S-571
4. COAT BOARDS WITH MOISTURE AND FUNGUS RESISTIVE COAT PER MIL-I-46058

TOLERANCES (EXCEPT AS NOTED)	Bunker Electronics Products — SYSTRON DONNER		
DECIMAL ±	NEXT ASSY 506, 948728 507, 948670	SCALE 1:1	DRAWN BY ONEGA T&CM
FRACTIONAL ±	TITLE P.C.B. TRIG. HOLD ASSY. A6		
ANGULAR ±	DATE	DRAWING NUMBER C 950471	REV. B

Figure 6.18 A6 Trigger Holdoff Board Assembly

DATE	SYM	REVISION RECORD	AUTH	OR	CK
3-17-2	B	PROTO RELEASE		OM	
9-26-2	C	CHANGE PER MARKUP			

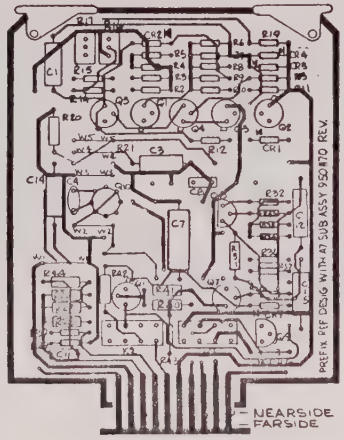

NOTES:

1 ASSEMBLE USING ML 950470

2 SEE SCHEMATIC 900333.

3 SOLDER USING SN60 PER QQ-S-571

4 COAT BOARD WITH MOISTURE AND FUNGUS RESISTIVE COAT PER MIL-I-46058

REF DESIGN	QTY	PART NO	DESCRIPTION
	2	28-02	EJECTORS, SCANBE S202
R16,17	2	47-03	POT. 10K 10% RJ24CX103
R27	1		RESISTOR FACTORY SELECT
R43	1	471429	RESISTOR METAL FILM 750Ω 1/4W 2%
R32	1	471424	RESISTOR METAL FILM 470Ω 1/4W 2%
R39	1	470042	RESISTOR METAL FILM 1.87M 1/4W 1%
R28	1	475687	RESISTOR FIXED COMP. 5.6M 1/4W 10%
R44	1	470045	RESISTOR METAL FILM 464K 1/4W 1%
R26	1	470041	RESISTOR METAL FILM 1.62M 1/4W 2%
R31,42	2	471408	RESISTOR METAL FILM 100Ω 1/4W 2%
R20,19	2	471467	RESISTOR METAL FILM 30K 1/2W 2%
R41	1	471434	RESISTOR METAL FILM 1.2K 1/4W 2%
R29	1	475652	RESISTOR, FIXED COMP 220K 1/4W 10%
R2, 15	2	471480	RESISTOR, METAL FILM 100K 1/4W 2%
R12	1	471451	RESISTOR, METAL FILM 6.2K 1/4W 2%
R3	1	471463	RESISTOR, METAL FILM 20K 1/4W 2%
R9,7	1	475678	RESISTOR, FIXED COMP, 1M, 1/4W, 10%
R13,14	2	471468	RESISTOR, METAL FILM 33K 1/4W 2%
R6	1	471474	RESISTOR METAL FILM, 56K, 1/4W, 2%
R5,30,33,34,35,36,37	7	471432	RESISTOR, METAL FILM, 1K, 1/4W, 2%
R4, R8, R10, R11, R40	5	471456	RESISTOR, METAL FILM, 10K, 1/4W, 2%
	4	480752	TRANSISTOR PAD
Q10	1	48-11	I.C. LM101AH.
Q9	1	48-05	TRANSISTOR 2N3799
Q1,3,4	3	48-04	TRANSISTOR, 2N2222A
Q8	1	48-09	TRANSISTOR, 2N489A
Q7	1	485004	TRANSISTOR, 2N2102
Q11	1	48-08	TRANSISTOR 2N2325
Q2,5,7	3		TRANSISTOR, PAD
Q2,5	2	485029	TRANSISTOR 2N4314
K1, K2	2	45-01	RELAY BR26-700A1-26V BABCOCK
	2	28-01	RELAY PADS
CR6,7	2	480003	DIODE 1N4005
CR1,2,3,4	4	480004	DIODE, 1N4446
C3, C14	2	157005	CAPACITOR .1MFD 80V MYLAR
C7	1	154002	CAPACITOR 22 MFD 35V TANT
C4	1	155490	CAPACITOR, MICA, 100PF, 500V
C1, 11	2	157002	CAPACITOR, MYLAR .01MFD 80V
C12, C15	2	157020	CAPACITOR, MYLAR .22MFD, 80V
C8	1	150100	CAPACITOR, CERAMIC, .01MFD 100V
	1	936234	PRINTED CIRCUIT BOARD

LIST OF MATERIAL

TOLERANCES (EXCEPT AS NOTED)	SYSTRON DONNER		
DECIMAL ±	NEXT ASSY. 506, 948268 507, 948270	SCALE 1/1	DRAWN BY OMEGA
FRACTIONAL ±	TITLE P.C.B. RESET ASSY. A7		
ANGULAR ±	DATE 2-22-72	DRAWING NUMBER C 950470	REV. C

Figure 6.19 A7 Reset Board Assembly

DATE	SYM	REVISION RECORD	AUTH	DR	C.K.
3-27-72	B	PROTO RELEASE		EW	

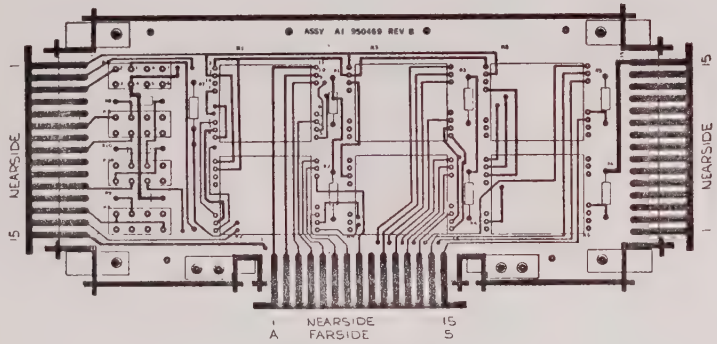

NOTES:
1. ASSEMBLE USING ML 950469
2. SOLDER USING SN60 PER QQ-S-571
3. SEE SCHEMATIC 900326
4. COAT BOARD WITH MOISTURE AND FUNGUS RESISTIVE COAT PER MIL-I-46058

REF DES	QTY	PART NO	DESCRIPTION	ITEM
	4	28-01	RELAY PAD, BIVAR 408-080	12
				11
K7-10	4	45-01	RELAY, BR26-700A1-26V BABCOCK	10
K1-6	6	45-02	RELAY, JDT2IDC1. POTTER & BRUMFIELD	9
				8
R1-10	10		RESISTOR C.C. 100Ω 1/4W 5%	7
				6
	6		SCREW 4-40 SKT. CAP. S.ST. .43 LONG	5
	8	289128	SCREW 4-40 PAN, PHILL. S.ST. .31 LONG	4
	4	928670	CLAMP	3
	2	928671	CLAMP	2
	1	936236	PRINTED CIRCUIT BOARD	1

LIST OF MATERIAL

TOLERANCES (EXCEPT AS NOTED)	CONTROL DATA CORPORATION SYSTRON DONNER		
DECIMAL ±	NEXT ASSY	SCALE	DRAWN BY APPROVED BY
FRACTIONAL ±	TITLE ASSY, P.C.B. RELAY A15		
ANGULAR ±	DATE 3-24-72	DRAWING NUMBER C 950469	REV. B

Figure 6.20 A15 Frequency Set Board Assembly

DATE	SYM	REVISION RECORD	AUTH	DR	CK
3-27-72	-	PROTO RELEASE		KH	[illegible]

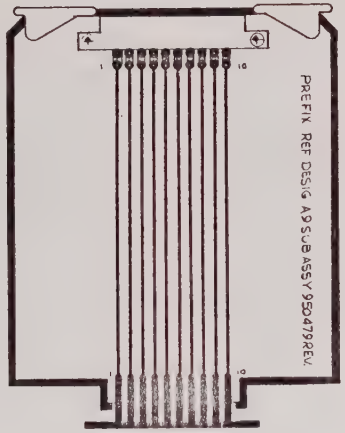

NOTES:

1 ASSEMBLE USING ML 950479

2 SOLDER USING SN60 PER QQ-S-571

3 COAT BOARD WITH MOISTURE AND FUNGUS RESISTIVE COAT PER MIL-I-46058

ITEM	PART NO.	DESCRIPTION	QTY
7	289702	NUT 4-40 PLAIN HEX S.ST.	2
6	289675	WASHER, #4 LOCKING S.ST.	2
5	280014	WASHER #4 PLAIN S.ST.	2
4		SCREW 4-40 PAN, PHILL, S.ST. .56 LONG	2
3	28-02	EJECTOR, SCANBE S202	2
2	21-05	CONNECTOR, VIKING 2VH10/1AKC15	1
1	936231	PRINTED CIRCUIT BOARD	1

LIST OF MATERIAL

TOLERANCES (EXCEPT AS NOTED)	[illegible]		
DECIMAL ±	NEXT ASSY 506, 948268 507, 948270	SCALE 1:1	DRAWN BY [illegible] APPROVED BY [illegible]
FRACTIONAL ±	TITLE ASSY. A9 EXTENDER		
ANGULAR ±	DATE 3-27-72	DRAWING NUMBER C950479	REV. B

Figure 6.21 A9 Extender Board Assembly

GENERAL

This addendum to the Maintenance Instruction Manual for the Systron-Donner Model 506 two-band Microwave Signal Source describes production changes in units 0005 and up, corrects errors in the original maintenance manual, adds clarifying statements to some operating theory, and corrects and expands the replacement parts lists.

The changes described in this addendum should be made directly in existing instruction manuals. Where drawings have been replaced, new full-size drawings supplied with the addendum should be substituted.

SERIALIZATION

Maintenance instruction manuals originally furnished described units with serial numbers 0001 through 0004 (these are the Systron-Donner serial numbers, found on a nameplate at the rear of the instrument). Units 0001 through 0004 were manufactured prior to calendar 1973.

Current production units, manufactured since mid-1974, are serialized 0005 and up. A change in the serialization system began with the next production unit, number 006024. With this system, the first three digits are the controlling numbers. The unit series runs 0005, 006024, 007024, etc. The last three digits indicate the lot number and date of manufacture, information not needed to use this addendum.

The serial number effectivity of each changed description or instruction in the accompanying addendum is noted, so fault location and repair activities may be more effective.

NEW ASSEMBLIES

Printed circuit assembly A13, the Interface Assembly, was added at S/N 0005. This assembly consolidates some components of the built-in-test (BIT) subsystem which were previously located throughout the unit mounted to connector and indicator terminals.

TEXT LOCATION

Each instruction in the accompanying addendum is keyed by section, page, paragraph, and line numbers. "Line" refers to a line of text or a line within a table; in text, these line numbers do not appear on the original page. Line counting in text begins from each numbered paragraph heading, starting over again with "1" at each heading. Where a change is made on a page which does not contain a numbered paragraph heading before the changed line, numbering begins with "1" at the top of the page. Spaces are not counted as lines under any circumstances.

Line numbering in tables begins with the first entry in the table as "1"; the titles at the top of the table do not count as lines, nor do spaces between entries. Each entry counts as one line, even though it may take more than a single vertical space. Line numbers have already been assigned and included in Table 5.5, and are therefore keyed directly.

CHANGE DATING

Whenever a change is made to any page, the date at the bottom of the page must be changed to reflect the change date; the changes in this addendum are dated 01-01-75.

SECT.	PAGE	PARA.	SERIAL NO.	INSTRUCTIONS
-	i	-	-	Update LOEP:

PAGE	CHANGE
i	1-01-75
ii	1-01-75
iii	1-01-75
iv	Original
4-1	Original
4-2	1-01-75
4-3	Original
4-4 through 4-18	1-01-75
4-19	Original
4-20	1-01-75
4-21 and 4-22	Original
4-23 and 4-24	1-01-75
5-1 through 5-22	1-01-75
5-23	Original
5-24 through 5-27	1-01-75
5-28 through 5-31	Original
5-32 through 5-35	1-01-75
5-36	Original
5-37 through 5-43	1-01-75
5-44 through 5-46	Original
5-47 through 5-60	1-01-75
6-1	1-01-75
6-2	Original
6-3 through 6-6	1-01-75
6-7	Original
6-8 through 6-11	1-01-75
6-12	Original
6-13 and 6-14	1-01-75
6-14A	1-01-75
6-15 through 6-18	1-01-75
6-19	Original
6-20 through 6-85	1-01-75

-	ii	-	-		Update Table of Contents:

PARAGRAPH	TITLE	PAGE
4.5.2	Paragraph Deleted	4-9
5.6	MODIFICATION AND SETUP	5-47
5.6.1	General	5-47
5.6.2	Power Supply Modification	5-47
5.6.3	High Band Oscillator Setup	5-50
5.6.4	Low Band Oscillator Setup	5-54
5.6.5	Directional Detectors	5-59

				0001-up	
-	iii	-	-	0001-up	

SECT.	PAGE	PARA.	LINE	SERIAL NO.	INSTRUCTIONS
4	4-2	-	9	0005-up	Add a line to Table 4.1, between A9 and A15: "A13 Interface Printed Circuit Assembly BIT"
4	4-4	-	-	0005-up	Make the following changes to Figure 4.1: CB1 - interchange designations for terminals 1 and 2; interchange designations for terminals 3 and 4 CB2 - add designation for terminal 2 to left side; add designation for terminal 1 to right side CB3 - interchange designations for terminals 3 and 4; interchange designations for terminals 1 and 2 CB4 - interchange designations for terminals 1 and 2; interchange designations for terminals 3 and 4 CB5 - interchange designations for terminals 3 and 4; interchange designations for terminals 1 and 2 K1 - add designation for terminal X1 at bottom of relay; add designation for terminal X2 at top of relay K2 - interchange designations for terminals B1 and B2 A20 - interchange designations for terminals A and C
4	4-5	4.4.3	1	0005-up	Change sentence to read "+250 VDC is used as a tuning voltage in the low band oscillator, A18."
4	4-6	-	-	0005-up	Make the following changes in the upper-left quadrant of Figure 4.2: Change designation CB3-4 to read CB3-3 Change designation CB3-2 to read CB3-1
4	4-7	4.5	2	0005-up	Change sentence to read: ....."circuit assemblies A4 (BIT #1), A13 (Interface), A5 (BIT #2), eight red front-panel".....
4	4-7	4.5	9	0005-up	Change sentence to read: ....."6.7, 6.9, 6.10, 6.11, and 6.12A in Section 6".....
4	4-7	4.5.1	8	0001-up	Change sentence to read: ....."to Figures 4.1, 4.3, and 4.4)."
4	4-7	4.5.1	10	0005-up	Change to read: ....."pin D of connector J37 and terminal E26 of A13 to the anode of diode CR5. 28 VDC is applied through CR5, terminal E27 of A13, and pin H of connector J34".....

SECT.	PAGE	PARA.	LINE	SERIAL NO.	INSTRUCTIONS
4	4-8	-	-	0005-up	Add terminal designations for Interface board A13 to Figure 4.3: E12 - top of Gate Q1 at upper-right of figure E11 - left side of Gate Q1 at upper-right of figure E28 - anode of CR10 at mid-right of figure E25 - anode of CR2 at mid-right of figure E26 - anode of CR5 at mid-right of figure E27 - cathodes of CR2, CR5, and CR10 at mid-right of figure E25 - right side of resistor R118 at mid-right of figure E28 - right side of resistor R112 at mid-right of figure E24 - anode of CR16 at mid-left of figure E29 - anode of CR3 at mid-left of figure E7 - anode of CR8 at mid-right of figure E8 - anode of CR13 at mid-right of figure E9 - junction of CR8 and CR13 cathodes at mid-right of figure E4 - anode of CR9 at lower-right of figure E5 - anode of CR1 at lower-right of figure E6 - junction of CR9 and CR1 cathodes at lower-right of figure Add note to Figure 4.3: "Terminals designated 'E' are located on Interface board A13"
4	4-9	4.5.2	-	0001-up	Delete text of Paragraph 4.5.2; mark paragraph "deleted"
4	4-9	4.5.3	2	0005-up	Change sentence to read: ....."connects to ground through gate Q1 on A13."
4	4-9	4.5.4	18	0001-up	Change last sentence to read: ....."amplifier with a gain of ≈10."
4	4-10	4.5.4	2	0001-up	Change lines 2 through 5 to read: "Normally, the output of Q7 is ≈-17V, which maintains a level of 0 to -2 V at the junction of R18 and CR3, keeping switch Q2 turned "off". In the absence of a positive signal from Q5 (and consequently a negative signal from Q6), Q7 changes state; the voltage at the junction of R18 and CR3 rises to ≈ +17 V, enough to turn on switch Q2 through CR2 and switch Q1 through CR3."
4	4-10	4.5.4	9	0005-up	Change lines 9 and 10 to read: ....."connected through J41-15, A15K7, J42-A, and A13-E28 to diode CR10. In low band position (L), +28 VDC would be connected from J41-S through A15K4, J42-C, and A13-E25 to diode CR2."
4	4-10	4.5.5	16	0005-up	Change to read "+28 VDC from J42-A is coupled through A13-E28, load resistor R112, and diodes CR6 and CR3 to ground; A13-E29 and J34-8 are held at a constant +600 mV".....

SECT.	PAGE	PARA.	LINE	SERIAL NO.	INSTRUCTIONS
4	4-11	4.5.6	3	0001-up	Change to read: ....."J53 (high band sampler 1060-3) is fed through".....
4	4-11	4.5.6	5	0001-up	Add information: Q5 is an N-channel junction field-effect transistor (JFET) which is normally biased "on" when its gate voltage is zero.
4	4-11	4.5.6	9	0001-up	Change to read: ....."amplifies the gate output by about 10 and applies".....
4	4-11	4.5.6	11	0001-up	Change to read: ....."is about -17 V, but in the absence".....
4	4-11	4.5.6	19	0001-up	Add information: ....."through JFET gate Q13 (normally biased "on" when its gate voltage is zero) to switch Q15;".....
4	4-11	4.5.6	20	0005-up	Add information: ....."through A13-E7, diode CR8, A13-E9, and J35-C".....
4	4-12	-	-	0005-up	Modify Figure 4.4 as follows: Add terminal designation A13-E26 to anode of CR5; terminal designation A13-E27 to cathode of CR5 Add callout OVERTEMP SWITCH to S7
4	4-13	4.7.1.1	1	0005-up	Change to read: "The oscillator assembly (A17) includes YIG-driver (FM)".....
4	4-13	4.7.1.1	5	0005-up	Change to read: ....."the input to the YIG driver."
4	4-13	4.7.1.1	9	0005-up	Change last sentence to read: "The YIG driver converts the drive voltage from the frequency reference generator to a current drive, as required by the tuning coil in the YIG (yttrium-iron-garnet)-tuned Gunn-diode oscillator modulator within oscillator assembly A17."
4	4-13	4.7.1.1	21	0001-up	Delete last sentence in its entirety
4	4-14	-	-	0001-up	Modify Figure 4.5 as follows: Add a variable resistor symbol to the top of the box labelled LEVELER/AMPLITUDE MODULATOR in

	PARA	UNIT	SERIAL NO.	INSTRUCTIONS
	-	-	0005-up (Cont)	Modify Figure 4.5 as follows: (Cont from previous page) high band oscillator module A17 (upper-left quadrant). Label this control POWER ADJ INCR Add a variable resistor symbol to the bottom of the box labelled LEVELER/AMPLITUDE MODULATOR in low band oscillator module A18 (lower-left quadrant). Label this control POWER ADJ INCR
	-	-	0005-up	Modify Figure 4.5 as follows: At upper-left quadrant, delete word "linearizer" from block near J51-A, substitute "YIG driver" Add reference designation A10 to YIG DRIVER block in A17 Add reference designation A11 to LINEARIZER block in A18 Add reference designation A12 to LEVELER/AMPLITUDE MODULATION block in A18 Add reference designation A21 to LEVELER/AMPLITUDE MODULATION block in A17 Add model number 1060-4 to DIRECTIONAL DETECTOR in A17 Add model number 1060-1 to DIRECTIONAL DETECTOR in A18 Add model number 1060-3 to high band directional coupler/detector (ref connectors J53, J69, J68, J70) Add model number 1060-2 to low band directional coupler (ref connectors J94, J95, J96)
	1.7.1.2	1	0005-up	Delete phrase "also a sealed unit,".....
	1.7.1.4	6	0001-up	Add information: ....."output power of +25 dBm (315 mW) at J73".....
	1.7.1.4	13	0001-up	Change to read: ....."frequency to less than 0.4 dB total over the rated frequency range."
	-	-	0001-up	Modify Figure 4.6 as follows: Move graph line marked LOW END OF POWER ADJUSTMENT RANGE from its position at +27 dBm (500 mW) to +24 dBm (250 mW) Move graph line marked HIGH END OF POWER ADJUSTMENT RANGE from its position at +33 dBm (2.0 W) to +30.4 dBm (1.10 W)

SECT.	PAGE	PARA.	LINE	SERIAL NO.	INSTRUCTIONS
4	4-17	4.7.2.1	1	0005-up	Delete paragraph as written, substitute following: "The low band oscillator assembly includes linearizer (FM) and amplitude modulation (AM) printed circuit assemblies and a directional detector which feeds the BIT circuits. The low band source and modulator are built as a single unit (model 2011-1), unlike the high band oscillator and modulator which are discrete components. For this reason, the directional detector is connected after the modulator. The linearizer assembly, as the name implies, ensures that the oscillator tunes linearly with frequency. If the 2011-1 oscillator/modulator were to be replaced, the A18 assembly would have to be recalibrated by replacing all the select-by-test components on the linearizer board with experimentally-determined values."
4	4-18	4.8.1.1	4	0001-up	Delete last sentence of first paragraph, substitute following: "Sweep comparator Q2 samples the sweep ramp from J32-5; at approximately +60 mV (adjusted by R9), the output of Q2 changes state. The output changes from ≈ +8 V to ≈ -17 V. At this point, diodes CR2 and CR8 will become reverse biased, the gate voltage on JFET's Q4 and Q3 will drop to zero, and the FET's will conduct. Therefore, when the sweep ramp input to Q2 is positive, the external/manual and line trigger signals to trigger sweep board A2 will be short-circuited to ground. At the end of sweep, when the ramp voltage has fallen to zero (±40 mV), the output of Q2 will be positive, forward biasing CR2 and CR8 and turning gates Q3 and Q4 'off'. Trigger signals will be able to pass through until the next sweep has been initiated."
4	4-20	4.8.1.2	2	0001-up	Change "Q1" to read "Q2".
4	4-23	4.8.2.1	2	0001-up	Change "entegrator" to read "integrator".
4	4-23	4.8.2.1	13	0001-up	Change to read: ....."the full 0 to +10 V ramp voltage through R2."
4	4-23	4.8.2.1	17	0001-up	Change to read: ....."resulting output is a -10 to 0 V ramp;".....
4	4-24	4.9.1.2	2	0005-up	Add information: ....."of K10 and to gate Q1 <u>on Interface board A13</u>".....

SECT.	PAGE	PARA.	LINE	SCN. A.R.O.	INSTRUCTIONS
4	4-24	19.1.4	4	0001-up	Change to read: .....''the oscillator assembly to the low end of the power adjustment range.

SPACE RESERVED

CHANGE	PARA.	SHEET	ITEM NO.	EFFECTIVITY	INSTRUCTIONS			
5	5-1	-	-		Modify Table 5.1 as indicated:			
			1	0001-up	A1	950469	Relay P.C. Assembly[3]	Factory (recommended) or Depot
			8	0001-up	A8	950457	Regulator P.C. Assembly[6]	Factory (recommended) or Depot[2]
			10	0005-up	A13	950695	Interface P.C. Assembly	Factory (recommended) or Depot
			11	0001-up	A15	950509	Frequency Set Assembly[3]	Factory (recommended) or Depot
			12	0001-up	A16	340003[7] 340000[7]	High Band Power Amplifier	Factory Repair Only[1]
			13	0005-up	A17	950510	High Band Oscillator Assembly	Factory (recommended) or Depot[8]
			14	0005-up	A18	950511	Low Band Oscillator Assembly	Factory (recommended) or Depot[8]
			15	0001-up	A19	110314[7] 110313[7]	Low Band Power Amplifier	Factory Repair Only[1]
			16	0001-up	A20	950512	Power Supply Assembly[5]	Factory (recommended) or Depot[2]
			17	0005-up		950523	RF Cable, High Band Oscillator Out	Not Repairable
	5-2		1	0001-0004		950529	RF Cable, Low Band Oscillator Out	Not Repairable
			2	0005-up		950527	RF Cable, Low Band Oscillator Out	Not Repairable
			3	0001-up		110012	High Band Isolator[9]	Not Repairable
			4	0001-up	1060-3	950543	High Band Directional Detector/Coupler[9]	Factory Repair Only[1]
			5	0001-up	1060-2	948287	Delete this extra line in original table	
			6	0001-up	1060-2	950544	Low Band Directional Coupler	Not Repairable
			7	0001-up		279000	High Band Harmonic Filter[9]	Not Repairable
			8	0001-up		340001	SMA to Waveguide Transition	Not Repairable
			9	0001-up	1056-1	950533	High Band Directional Detector (Leveler)	Factory Repair Only[1]
			10	0001-up	1051-1	950536	Low Band Directional Detector (Leveler)	Factory Repair Only[1]

DOC.	PAGE	PARA.	LINE	SERIAL NO.	INSTRUCTIONS
5	5-2 Cont	-			Modify Table 5.1 as indicated: (Cont from previous page)
			11	0001-up	950522[7] 950522A[7] RF Cable, High Band Amplifier Out — Not Repairable
			12	0001-0004	950527 RF Cable, Low Band Amplifier Out — Not Repairable
			13	0005-up	950529 RF Cable, Low Band Amplifier Out — Not Repairable
			14	0001-up	950525 RF Cable, High Band Isolator to Filter[9] — Not Repairable
			15	0001-up	950526 RF Cable, High Band Filter to Sampler[9] — Not Repairable
			16	0001-up	950524 RF Cable, High Band Sampler to Adapter — Not Repairable
			17	0001-up	950532 RF Cable, Low Band Coupler to J6[10] — Not Repairable
			18	0001-up	950531 RF Cable, Low Band Coupler to J9[10] — Not Repairable
			19	0001-up	950528 RF Cable, High Band Sampler to J8[10] — Not Repairable

Modify Table 5.1 notes as indicated:

3) A1 Relay P.C. Assembly 950469 is included within A15 Frequency Set Assembly 950509.

6) A8 Regulator P.C. Assembly 950457 is included within A20 Power Supply Assembly 950512.

7) Interchangeable parts; in all cases, the numerically higher part number (or alphabetically higher revision letter) signifies the current/preferred part.

8) Other than P.C. assemblies and wiring within the oscillator assemblies, all components are listed as non-repairable or repairable only at the factory. The entire oscillator assembly must be returned if repairs to any component are required.

9) Part of Filter Plate Assembly 950702

10) Cable assembly includes bulkhead-mount Type N output connector (J6, J8, or J9)

SECT.	PAGE	PARA.	LINE	SERIAL NO.	INSTRUCTIONS				
5	5-2	-	-		Modify Table 5.2 as indicated:				
			1	0001-up	A1	950469	Relay P.C. Assembly[3]	1	2
	5-3		4	0005-up	A13	950695	Interface P.C. Assembly	1	3
			5	0001-up	A15	950509	Frequency Set Assembly[3]	1	2
			6	0001-up	A16	340003[2,5]	High Band Power Amplifier	2	3
			7	0001-up	A17	950510[2,5]	High Band Oscillator Assembly	1	2
			8	0001-up	A18	950511[2,5]	Low Band Oscillator Assembly	1	2
			9	0001-up	A19	110314[2,5]	Low Band Power Amplifier	1	2
			10	0001-up	A20	950512	Power Supply[1]	1	2
			11	0001-up		950523	RF Cable, High Band Oscillator Out	1	4
			12	0001-0004		950529	RF Cable, Low Band Oscillator Out	1	4
			13	0005-up		950527	" "		
			14	0001-0004		950527	RF Cable, Low Band Amplifier Out	1	4
			15	0005-up		950529	" "		
			16	0001-up	replaces	950522A 950522	RF Cable, High Band Amplifier Out	1	4
			17	0001-up		110012	High Band Isolator Assembly	1	4
			18	0001-up	1060-3	950543	High Band Directional Detector/Coupler	1	4
			19	0001-up	1060-2	950544	Low Band Directional Coupler	1	4
			20	0001-up		279000	High Band Harmonic Filter	1	4
			21	0001-up		340001	SMA to Waveguide Transition	1	4
			22	0001-0004	1056-1	950533[4]	High Band Directional Detector (Leveler)	1	4
			23	0005-up	1056-1	950533	" "		
			24	0001-up	1051-1	950536	Low Band Directional Detector (Leveler)	1	4
			25	0001-up		950525	RF Cable, High Band Isolator to Filter	1	4
			26	0001-up		950526	RF Cable, High Band Filter to Sampler (1060-3)	1	4
			27	0001-up		950524	RF Cable, High Band Sampler to Waveguide Transition	1	4

SECT.	PAGE	PARA.	LINE	SERIAL NO.	INSTRUCTIONS
5	5-3			0001-up	Change component part numbers as indicated:
			28		51-02 510089
			29		51-03 510090
			30		51-01 510088
	5-4		1		51-01 510088
			2		51-01 510088
			3		51-04 220000
			4		39-08 390015
			5		45-03 450017
			6		45-04 450013
			7		53-01 510087
			8		21-08 210238
			9		21-09 210240
			10		21-18 210235
			11		47-06 479681
			12		51-05 510086
			13		51-07 510057
			14		51-08 510058
			15		51-09 510064
			16		51-10 510063
			17		39-01 390013
			18		39-06 390014
			19		39-02 390011
			20		39-03 390012
			21		39-04 390010
	5-5		1		39-07 390009
			2		39-05 510092
			3		21-06 210236
			4		21-07 210237
			5		21-19 210233
			6		47-05[6] 479682[6]

Add notes 2 - 6 to Table 5.2; modify note 1 as indicated:

1) A8 Regulator P.C. Assembly 950457 is included within A20 Power Supply Assembly 950509.

2) Part number shown is preferred/current configuration.

3) A1 Relay P.C. Assembly 950469 is included within A15 Frequency Set Assembly 950509.

4) High Band Leveler 1056-1 (950533) replacement in Model 506 S/N 0001 - 0004 may require recalibration of High Band Oscillator Assembly A17; refer to Paragraph 5.6.

5) Replacement of module in units S/N 0001 - 0004 with current/preferred module may require setup procedures in addition to the calibration procedures of Paragraph 5.3; refer to Paragraph 5.6.

6) Included with cable assemblies 950528, 950531, 950532

ITEM	PAGE	PARA.	LINE	SERIAL NO.	INSTRUCTIONS
5	5-6	5.3	5	0001-up	Add the following paragraph at the bottom of the page: "In addition to these calibration procedures, Paragraph 5.6 lists detailed setup and/or modification procedures which may be required when modules A16, A17, A18, A19, or the 1056-1 leveler in early (S/N 0001-0004) units are replaced with current/preferred modules. The procedures in Paragraph 5.6 are not routine calibration procedures and should not be performed on a regular basis.
5	5-7	-	-	0001-up	Modify Table 5.3 by adding a column to the extreme right side of the table; at the column heading, in line with listings 5.3.3, 5.3.4, etc., add a column heading for Paragraph 5.6 and label it "SETUP/MODIFICATION". Continue the grid pattern of the table so that there are 17 squares under the "5.6" column heading. Place an "X" in the squares under "5.6" for A16, A17, A18, A19, A20, 1056-1, and 1051-1.
5	5-7	-	18	0005-up	Modify Table 5.3 by adding a column at the bottom of the table; the column entries are shown below:
5	5-8	5.3.3 (a.)	9	0001-up	Change sweep ramp voltage to ≈ 100 mV (was ≈60 mV)
5	5-8	5.3.3 (b.)		0001-up	Substitute the following procedure for paragraph b: Variable resistor A4 R37, high band oscillator malfunction sensitivity adjustment. Set the SWEEP SELECT switch to MANUAL SCAN and the MANUAL SCAN/VERNIER control to X10. Set the BAND MODE switch to H1, and slowly sweep the entire band manually. Adjust A4R37 so that the high band OSC MALF indicator lights, preferably at no more than two or three frequencies within the band. Continue to adjust A4R37 until the OSC MALF indicator lights at only one setting of the MANUAL SCAN/VERNIER control, then adjust the control slightly further until the indicator goes out. Adjust A4R37 two complete turns further, and leave it at this point.
5	5-8	5.3.3 (c.)		0001-up	Substitute the following procedure for paragraph c: Variable resistor A4R59, low band oscillator malfunction

MODULE	NOMENCLATURE	5.3.3	5.3.4	5.3.5	5.3.6	5.6
A13	Interface P.C. Assembly	X	X			

REV	PAGE	PARA.	LINE	SERIAL NO.	INSTRUCTIONS
5	5-8 (Cont)	5.3.3 (c.)		0001-up (Cont)	(Cont from previous page) sensitivity adjustment. Set the SWEEP SELECT switch to MANUAL SCAN and the MANUAL SCAN/VERNIER control to X10. 5-10 Connect the 1051-1 leveler to the unit, then connect the power meter through appropriate attenuators to the 1051-1. Set the BAND MODE switch to L. Adjust the front panel POWER ADJ INCR control fully CCW for minimum power; ensure the output level is ≈+24 dBm (250 mW). Adjust A4R59 until the low band OSC MALF indicator lights, preferably at no more than two or three frequencies within the band. Continue to adjust A4R59 until the OSC MALF indicator lights at only one setting of the MANUAL SCAN/VERNIER control, then adjust the control further until the indicator just goes out. Adjust A4R59 two complete turns more, and leave it at this point.
5	5-9	-	-	0001-up	Modify Figure 5.1: Add callout "A7R7" to the left of A7R27/A7R29; draw an arrow to the board about one inch above A7R16.
5	5-9	-	-	0001-up	Add callouts to Figure 5.1: A4 A4R15 SWEEP MALF ADJ A4R37 H BAND OSC MALF ADJ A4R59 L BAND OSC MALF ADJ A5 A5R36 PA MALF ADJ A5R40 LEVELERS MALF ADJ A6 A6R9 TRIGGER HOLDOFF A7 A7R16 1 KHZ ADJ A7R17 +10 V ADJ
5	5-11 5-12	-	-	0001-up	Modify Table 5.4 to reflect current recommended test equipment: c Coaxial attenuator, 10 dB — Systron Donner 441A-10 — 1 e Crystal Detector — Systron Donner 306 — 1 f BNC termination, 50Ω — Systron Donner 454 — 1 g AC/DC Multimeter — Systron Donner 7205 — 1 h Oscilloscope — Tektronix 5403/5A22/5A45/5B10 — 1 j Frequency Counter — Systron Donner 6054A — 1 k Function Generator — Systron Donner 401 — 1 l Cables with "N" connectors — Systron Donner 36000-160 (24") or -161 (48") — A/R m Cables with "BNC" connectors — Systron Donner 36000-156 (18") or -157 (48") — A/R

	PAGE	PARA	LINE	SERIAL NO.	INSTRUCTIONS
	5-13 Cont	-	-	0001-up (Cont)	(Cont from previous page) n Coaxial termination, 50Ω — Systron Donner 455 — 1 o Waveguide termination — Systron Donner DBG450 — 1 q Power Supply, 28 VDC# — Systron Donner HH32-1.5 — 1 r Waveguide to "N" transition — Systron Donner DBG-057 — 1 s Microwave Spectrum Analyzer — Systron Donner 2311/4701/4809/4745-04 — 1 ea t Mixers for item s — Systron Donner 7120A, 7121A, 7122A, 37000-451 — 1 ea i. Line isolation/variable transformer, 115 V in - 0 to 126.5 out, 5 A minimum current, metered — Staco EJ901V — 1 v. DC Block (noise suppressor) — Systron Donner 738 — 1
5	5-13	5.4.2	1	0001-up	Change step 1 to read: Connect the power cord of the variable isolation transformer to a source of ≈117 V rms, 60 Hz, 1 ϕ power. The power source must be capable of supplying a minimum of 5 A, and must include a third wire ground connection. Although not required for system operation, the specified (or equivalent) line isolation transformer must be used in calibration and bench testing operations to prevent excessive power line noise from affecting measurements.
5	5-13	5.4.2	o	0001-up	Change setting of current limit control to 1.5 A, was 1 A.
5	5-13	5.4.2	p	0001-up	Change step p to step t ; add four new steps: p. Attach high band directional detector 1056-1 directly to output waveguide flange J4. Connect a leveling cable from the leveler output BNC connector to connector J5 on the front panel of the 506. q. Attach a waveguide termination (item o of Table 5.4) to the RF output waveguide flange of the 1056-1. r. Attach low band directional detector 1051-1 directly to output connector J6. Connect a leveling cable from the leveler output BNC connector to connector J7 on the front panel of the 506. s. Attach a coaxial termination (item n) to the 1051-1 RF output connector. WARNING DO NOT OPERATE THE UNIT WITH UNTERMINATED OUTPUTS. TO AVOID POSSIBLE INJURY, DO NOT LOOK INTO WAVEGUIDE SECTIONS OR COAXIAL LINES.

SECT.	PAGE	PARA.	LINE	SERIAL NO.	INSTRUCTIONS
5	5-13	5.4.3	4	0001-up	Add four steps at the beginning of the procedure: a. Set the DRAWER POWER 28 VDC switch to ON. Verify that the 28 VDC indicator lights. b. Set the DRAWER POWER 115 V 60 HZ switch to ON. Verify that the 115 V 60 HZ indicator lights. c. Set the SWP/OSC POWER switch to ON. Verify that the ON indicator lights. d. Verify that the STATUS READY indicator is lighted.
5	5-13 5-14	5.4.3		0001-up	Change the remaining steps in this paragraph to accommodate four added steps; a=e, b=f, c=g, etc.
5	5-14	5.4.3	h	0001-up	Add a note after step h (was step d): NOTE The oscilloscope differential mode is defined as + oscilloscope input to TP7 +20 V, - oscilloscope input to TP5 GND, and oscilloscope chassis ground to a convenient rear-panel ground point of the 506. If the measured ripple exceeds the specified value, check to be sure a line isolation transformer is used in the test setup. In areas of high power-line noise, it may not be possible to accurately measure ripple without such a transformer.
5	5-14	5.4.3	k	0001-up	Add a sentence to step k (was step g) : "Use a differential measurement mode with the - oscilloscope input to TP8 - 20 V, the +input to TP5 GND, and oscilloscope chassis ground to 506 chassis ground.
5	5-14 5-15	5.4.4		0001-up	Delete steps a through d; change subsequent steps e through ac to read, in order, a through y.
5	5-15	5.4.4	a	0001-up	Delete last sentence of step a (was step e).
5	5-15	5.4.4	d	0001-up	Add sentence at end of step d (was step h): "Set the BAND MODE switch to H1."
5	5-15	5.4.4	e	0001-up	Change last sentence of step e (was step i) to read: "Set the TRIGGER switch to AUTO; verify that the MALF indicator goes out."
5	5-15	5.4.4	f	0001-up	Change second sentence in step f (was step j) to read: "Verify that the DRAWER OVER TEMP and DRAWER MALF indicators light."

SECT.	PAGE	PARA.	LINE	SERIAL NO.	INSTRUCTIONS
5	5-15	5.4.4	h	0001-up	Change step h (was step l) to read: ....."the 115 VAC 60 HZ, SWP/OSC ON, H BAND PA ON, and L BAND PA ON indicators light."
5	5-15	5.4.4	i	0001-up	Change step i (was step m) to read "Repeat steps f and g."
5	5-15	5.4.4	j	0001-up	Change step reference in step j (was step n) to read ....."the same as those noted in step i.
5	5-15	5.4.4	l	0005-up	Change step l (was step p) to read: ....."indicator lights for ≈ 60 to ≈ 150 seconds".....
5	5-16	5.4.4	m	0001-up	Delete reference in step m (was q) to 962103; substitute "A17"
5	5-16	5.4.4	t	0001-up	Add information to step t (was step x): ....."and verify that the MALF indicator lights."
5	5-16	5.4.4	u	0001-up	Substitute the phrase "goes out" for "flashes momentarily" in step u (was step y).
5	5-16	5.4.4	v	0001-up	Delete reference in step v (was z) to 962104; substitute "A18"
5	5-16	5.4.4	z	0001-up	Add step z after step y (was step ac): "Set the SWEEP SELECT switch to F START."
					SPACE RESERVED
5	5-17	5.4.5	g	0001-up	Change last sentence in step g to read: ....."H BAND PA ON and L BAND PA ON indicators light".
5	5-18	5.4.5	i	0001-up	Change step i to read: "Set the test fixture remote band mode switch to the "H1" position and wait for the amplifier time delay to elapse; the PA MALF indicator will go out and STATUS READY will light."
5	5-18	5.4.5	n	0001-up	Delete step n in its entirety.
5	5-18	5.4.5	o	0001-up	Delete step o in its entirety.
5	5-18	5.4.6	a	0001-up	Change step a to read: "Set the SWEEP SELECT switch to 10 SECONDS and the MANUAL SCAN/VERNIER control to maximum CW rotation."
5	5-19	5.4.6	p	0001-up	Delete second sentence of step p in its entirety.

SECT.	PAGE	PARA.	LINE	SERIAL NO.	INSTRUCTIONS
5	5-20	5.47.1	j	0001-up	Change step j to read: ....."MANUAL SCAN/VERNIER control to X1; observe".....
5	5-21	-	-	0001-up	Modify Figure 5.2 to show counter model designation as 6054A; was shown as 6316B.
5	5-21	-	-	0001-up	Modify Figure 5.3 to show counter model designation as 6054A; was shown as 6316B.
5	5-22	5.47.1	k	0001-up	Change step k to read: ....."MANUAL SCAN/VERNIER control to X10 and".....
5	5-22	5.47.2	f	0001-up	Delete phrase "and the MANUAL SCAN/VERNIER control to X10" from step f .
5	5-24	5.48.1	e	0001-up	Change step e to read: ....."the MANUAL SCAN/VERNIER control to X10."
5	5-24	5.48.1	f	0001-up	Replace step f with the following: "Turn the BAND MODE switch to H1 and slowly rotate the MANUAL SCAN/VERNIER control to find the in-band frequency at which the lowest power output is present. Adjust the HIGH BAND LEVELER POWER ADJ INCR control for an indicated output power of -10.00 dBm (100 μW)."
5	5-24	5.48.1	g	0001-up	Replace flatness specification in step g (± 0.2 dB) with current flatness specification of 0.4 dB p-p.
5	5-24	5.48.1	i	0001-up	Change step i to read: "Set the BAND MODE switch to RF OFF, then disconnect the power meter head from the waveguide transition."
5	5-24	5.48.1	j	0001-up	Change step j to read: "Disconnect the waveguide transition from the attenuator and substitute the waveguide termination in its place."
5	5-24	5.48.2	c	0001-up	Replace step c with the following: "Turn the BAND MODE switch to L and slowly rotate the MANUAL SCAN/VERNIER control to find the in-band frequency at which the lowest power output is present. Adjust the LOW BAND LEVELER POWER ADJ INCR control for an indicated output power of -10.00 dBm (100 μW)."
5	5-25	5.48.2	d	0001-up	Replace flatness specification in step d (± 0.2 dB) with current flatness specification of 0.4 dB p-p.

SECT.	PAGE	PARA.	LINE	SERIAL NO.	INSTRUCTIONS
5	5-25	5.4.8.2	e	0001-up	Change step e to read: "Set the BAND MODE switch to RF OFF, then move the power meter head and 10 dB attenuator to J9 on the rear panel. Connect the coaxial termination to the output of the 30 dB attenuator."
5	5-25	5.4.9.1	-	0001-up	Delete steps a through e and substitute the following: a. Connect the test equipment as shown in Figure 5.6. b. Set the SWEEP SELECT switch to F STOP. c. Set the BAND MODE switch to H1. d. Set the MODULATION switch to INTERNAL. e. While viewing the detected modulation waveform on the display unit (oscilloscope), adjust the 506 PERCENT control until the detected output is in saturation (a further increase in the setting of the PERCENT control will produce no further increase in the p-p amplitude of the 1 kHz signal). Do not adjust the PERCENT control appreciably past this point, or overmodulation may result; this will usually be evidenced by a shift in the position of the square wave transition and an increase in symmetry error.
5	5-27	5.4.9.2	-	0001-up	Delete steps b and c; substitute the following: b. Set the BAND MODE switch to L. c. Set the MODULATION switch to INTERNAL. Adjust the PERCENT control to produce the maximum amplitude of detected 1 kHz modulation without producing symmetry shift.
5	5-26	-	-	0001-up	Modify Figure 5.6 by deleting callouts J10, SWEEP, and HORIZ IN; delete line between signal source and oscilloscope
					SPACE RESERVED
5	5-26	-	-	0001-up	Modify Figure 5.7 by deleting callouts J10, SWEEP, and HORIZ IN; delete line between signal source and oscilloscope
					SPACE RESERVED

SECT.	PAGE	PARA.	LINE	SERIAL NO.	INSTRUCTIONS
5	5-32	5.5.1	1	0001-up	Delete paragraph 5.5.1; substitute the following:

5.5.1 General. Field repair of the 506 is normally limited to location, removal, replacement, and recalibration of the malfunctioning module. Recalibration is generally required when printed circuit board assemblies A2, A4, A5, A6, A7, or A8 are replaced or when modules A16, A17, A18, or A19 are replaced.

Table 5.3 references the calibration procedures required when various modules are replaced.

In some instances, it may be necessary to replace a malfunctioning module in a unit carrying a serial number below 0005 with a current spare part (one manufactured for use in units 0005 and up). This may be done as long as the setup and modification instructions in Paragraph 5.6 are performed when required.

Table 5.1 lists the modules that may be repaired at the depot level and those that must be returned to the factory for repair. FIELD MAINTENANCE IS LIMITED TO REMOVAL, REPLACEMENT, AND RECALIBRATION OF MALFUNCTIONING MODULES.

5.5.1.1 PRINTED CIRCUIT BOARD REPAIR. To avoid damage to printed circuit board assemblies, solder or remove components only with a low power (25 to 50 W, 500 to 700°F) soldering iron. Do not use soldering guns or large irons; use only 63-37 or 60-40 rosin core solder.

To remove integrated circuits, use a special iron tip that unsolders all leads at the same time (available from Ungar and other manufacturers). Remove excess solder from circuit board holes with a vacuum device.

5.5.1.2 PROTECTIVE COATING. Circuit boards originally supplied with units 0001 to 0004 are coated with Humiseal® conformal protective coating type 1A33 (Columbia Technical Corp., Woodside, N.Y.). Before repairing a circuit board coated with this material, the coating must be removed from the area of the repair using a solvent such as 111 Trichlorethane (Western Chemical, Milpitas, CA) or any inhibited Methyl Chloroform. Low pressure dry air aids removal of the coating compound.

After repairs have been effected, spray the area with Humiseal 1A33. It may be necessary to use masking tape over the edges and finger contacts of the board to keep the coating material from being applied to these areas.

Circuit boards supplied with units 0005 and up or supplied as spares were coated with Circuit Coate (uralane 8267 -

SECT.	PAGE	PARA.	LINE	SERIAL NO.	INSTRUCTIONS
5	5-39	-	27	0005-up	Modify CHECK column of Table 5.5: "Wait ≈150 seconds for time delay to elapse"
5	5-39	-	29	0001-up	Modify CONDITIONS column of Table 5.5: "After time delay has elapsed"
5	5-40	-	32	0005-up	Modify CHECK column of Table 5.5: "Insert -3 dBm signal".....
5	5-40	-	34	0001-up	Add reference designation "1060-3" to REPAIR/REPLACE column of Table 5.5.
5	5-40	-	35	0001-up	Add reference designation "1060-3" to REPAIR/REPLACE column of Table 5.5.
5	5-41		40	0001-up	Modify CHECK column of Table 5.5: "Between J51-H and J51-L for + or - 30 to 150 mV. Use".....
5	5-41		41	0001-up	Modify INDICATIONS column of Table 5.5: "+ or - 30 to 150 mV between J51-H and J51-L".
5	5-41	-	41	0005-up	Modify REPAIR/REPLACE column of Table 5.5: Delete "A17", substitute "A10 in A17"
5	5-41	-	44	0001-up	Modify CHECK column of Table 5.5: ....."for output -4 to +4 dBm"
5	5-41	-	45	0001-up	Modify REPAIR/REPLACE column in Table 5.5: Delete "A18", substitute "1060-1 in A18"
5	5-42	-	50	0001-up	Modify CHECK column of Table 5.5: "Insert 0 dBm signal".....
5	5-43		57	0001-up	Modify CHECK column of Table 5.5: "Between J81-H and J81-L for + or - 70 to 200 mV. Use".....
5	5-43		58	0001-up	Modify INDICATIONS column of Table 5.5: "+ or - 70 to 200 mV between J81-H and J81-L"
5	5-47	5.6		0001-up	Add Paragraph 5.6; insert after page 5-46. Complete text of 5.6 begins on next page of this addendum:

5.6 MODIFICATION AND SETUP

5.6.1 General. In addition to the normal recalibration required after module replacement (listed in Table 5.3), replacement of some RF modules with units of later design may necessitate modification or selection of components within units.

5.6.1.1 POWER SUPPLY. Replacement of High Band Oscillator A17 originally supplied with S/N 0001-0004 with the current, preferred oscillator 950510 requires that the current limit of the power supply module be increased to meet the higher current demands of the new oscillator module. After modification, the power supply will still be operating well within its design parameters.

In addition, the modification instructions include a parts change to permit power supplies originally furnished with units 0001-0005 to be used in any Model 506 or Model 507. As furnished originally, only power supplies in units 06024 and up are interchangeable without modification.

5.6.1.2 HIGH BAND RF COMPONENTS. Replacement of High Band Oscillator A17, High Band Amplifier A16, or external leveler 1056-1 (950533) will require a check of the leveling loop calibration and possible setup by selection of fixed components within A17.

These checks and setup procedures (where necessary) will also be required in the event any of the following components are replaced: high band oscillator output cable 950523, high band amplifier output cable 950522 or 950522A, high band isolator 110012, isolator to filter cable 950525, high band harmonic filter 279000, filter to sampler cable 950526, high band directional detector/coupler (sampler) 1060-3 (950543), sampler to adapter cable 950524, SMA to waveguide transition (adapter) 340001, or any components within A17 or A16.

5.6.1.3 LOW BAND RF COMPONENTS. Replacement of Low Band Oscillator A18, Low Band Amplifier A19, or external leveler 1051-1 (950536) will require a check of the leveling loop calibration and possible setup by selection of fixed components within A18.

These checks and setup procedures (where necessary) will also be required in the event any of the following components are replaced: low band oscillator output cable 950527 (950529 in units 0001-0004 or where amplifier input connector is on the same side as the output connector), low band amplifier output cable 950529 (950527 in units 0001-0004 or where amplifier input and output connectors are on the same side), low band directional coupler 1060-2 (950544), directional coupler to output connector cable 950532, or any components within A18 or A19.

5.6.2 Power Supply Modification. The following procedure details steps necessary to increase the current limit of the power supply for operating current A17 modules; modifications to ensure power supply compatibility between Models 506 and 507 begin with step o.

Normal hand tools are required: soldering iron, solder removal device, long-nose pliers, diagonal cutters, wire strippers, and a #2 Phillips-head screwdriver. The digital multimeter or any ohmmeter accurate to ±5% will be required to trace power supply wiring.

Three resistors are required: a 3 watt, 300 Ω ± 5% wirewound resistor available from Systron-Donner as P/N 477036 or from any distributor of Ward-Leonard products as P/N 3X300; two 1/4 watt, ± 2% metal film resistors (200 PPM temperature coefficient) in values of 820 Ω and 1 kΩ. These metal film resistors are Corning CL4 series, available from Systron-Donner as P/N 471430 (820 Ω) and 471432 (1 kΩ).

a. Turn off power to the Signal Source and disconnect the rear panel power plugs.

b. Remove power supply module A20 using the technique of Paragraph 5.5.3.10.

c. Take out two screws holding regulator board A8 (950457) in place, then remove A8.

d. Remove seven large screws holding the bottom plate in place, then tilt the bottom plate up to expose the internal power supply wiring.

e. Take out three small screws holding the heat sink cover in place, then remove the heat sink cover.

f. Locate the 10 Ω, 25 W resistor mounted to the inside of the bottom plate. One of the two resistor lugs will have two wires soldered to it. Remove both wires.

g. With an ohmmeter, determine which of the two wires is connected to filter capacitor C12 (4500 μF). Capacitor C12 will have black wires connected to its negative terminal.

h. Solder the wire from C12 to the remaining solder lug on resistor R28 (10 Ω, 25 W).

i. With the ohmmeter, determine that the remaining wire is connected directly to the collector of transistor Q7 (at the top of the heatsink).

j. Solder this wire to the resistor solder lug from which it was removed in step f.

k. Replace the heatsink cover removed in step e and the bottom plate removed in step d.

l. Review Paragraphs 5.5.1.1 and 5.5.1.2. Using the techniques described in these paragraphs, remove resistors R19 (620 Ω) and R12 (560 Ω) from regulator board A8. The location of these parts is shown in Figure 6.14.

m. Insert and solder the 820 Ω resistor into the holes from which R19 was removed.

n. Insert and solder the 1 kΩ resistor into the holes from which R12 was removed.

NOTE

Steps o through r should be performed to ensure compatibility between power supplies used in Model 506 and Model 507 sources. These steps are optional; power supply reassembly procedures resume with step s.

o. Locate terminal P of printed-circuit card connector J201; a red wire is connected to J201-P.

p. A component will be connected between J201-P and J201-B (and/or J201-2). Determine the value of this component; if it is a jumper wire or a 1 kΩ resistor, proceed to step q. If it is a 300 Ω resistor, go on to step s.

q. Carefully remove the jumper wire or 1 kΩ resistor from J201-P and J201-B (and/or J201-2).

r. Install Teflon® tubing over the leads of the 300 Ω, 3 W resistor specified in Paragraph 5.6.2 and solder the resistor between J201-P and J201-B.

s. Clean all solder flux from J201, A8, and R28.

t. Re-coat the modified areas of A8 with Humiseal® or Furane Circuit Coate.

u. Allow the coating compound to thoroughly dry in accordance with the manufacturer's instructions.

v. Install A8 with the screws removed in step c.

w. Replace power supply module A20 in the signal source and connect electrical power to the unit.

x. Perform the power supply performance checks of Paragraph 5.4.3.

SPACE RESERVED

5.6.3 High Band Oscillator Setup. High band oscillators are set up at the factory so the leveled power output is adjustable by the front-panel POWER ADJ INCR control from a minimum of slightly below +24 dBm to a maximum of slightly above +30 dBm. Any change of components within the A17 oscillator module or of components or modules in the leveling loop may require that setup procedures be performed at the repair depot to duplicate the original control range setup.

The hand tools listed in Paragraph 5.6.2 will also be needed for this procedure. In addition, an oscillator extension cable Model 9043, a comprehensive selection of 1/4 watt, ±2 %, 200 PPM metal film resistors ranging from ≈ 180 Ω to 910 kΩ (1/4 W, ±5%, carbon composition resistors may be used for values above 150 kΩ), and two resistance-substitution boxes switchable over the same ranges may be required if the initial checks in the procedure show the need for performance of the setup procedures.

In extreme cases a selection of dipped-mica ±5% capacitors ranging from ≈5 to 1000 pF may be required to adjust response time of the leveling amplifiers, and a selection of RF attenuators may be needed to compensate for amplifier gain variations (see step a1).

a. Set up the unit and test equipment as shown in Figure 5.4 and described in Paragraph 5.4.8.1 steps a to e. Set the unit to cover 8.95 to 11.05 GHz.

b. Adjust the POWER ADJ INCR control fully CW.

c. Adjust the MANUAL SCAN control to find the lowest power point; this should be -9.95 to -9.4 dBm.

d. Find the highest power point; the difference between the lowest and highest power points must not exceed 0.40 dB.

NOTE

If the requirements of steps c and d are not satisfied, proceed directly to step n.

e. Adjust the POWER ADJ INCR control fully CCW.

f. Adjust the MANUAL SCAN control to find the lowest power point; this should be -16.05 to -16.6 dBm.

g. Find the highest power point and determine that the differential between lowest and highest does not exceed 0.40 dB.

NOTE

If the requirements of steps e and f are not satisfied, proceed directly to step n.

h. Adjust the POWER ADJ INCR control for -10 dBm at ≈10 GHz.

i. Set the BAND MODE switch to RF OFF.

j. Set up the test equipment as shown in Figure 5.6, but do not use the 50 Ω BNC termination.

k. Set the SWEEP SELECT switch to .1 SECONDS and the MANUAL SCAN/ VERNIER control to X1.

l. Observe the detected output of the signal source on the oscilloscope screen as the source sweeps from 8.95 to 11.05 GHz. Check for oscillations, low points, or other evidence of unleveled operation.

m. Install the 50 Ω BNC termination and measure the square wave rise and fall times in accordance with Paragraph 5.4.9.1.

NOTE

If the results through step m have been satisfactory, proceed to step ai.

n. Set the SWP/OSC circuit breaker switch to OFF.

o. Remove oscillator module A17 from the signal source; it is held to the side panel with four screws.

p. Connect P51 through the Model 9043 extension cable to J51 on module A17.

q. Take out 18 screws holding the top cover in place and remove the top cover.

r. Locate and remove resistors A21R88 and/or A21R91; these resistors are mounted on standoff posts in most oscillator modules.

s. Locate and remove resistors A21R81 and/or A21R82 from their standoff posts.

t. Connect one resistance substitution box to the A21R81 standoff posts.

CAUTION

DO NOT ALLOW EITHER OF THE SUBSTITUTION BOX LEADS TO CONTACT GROUND, OTHER TRACES, OR EACH OTHER. DAMAGE TO OSCILLATOR MODULE A17 COULD RESULT.

u. Connect the test equipment as shown in Figure 5.4.

v. Set the SWP/OSC circuit breaker switch to ON, the BAND MODE switch to H1, and the SWEEP SELECT switch to MANUAL SCAN. Verify operating indicators.

w. Set the POWER ADJ INCR control to its fully CW position; select a resistance value for A21R82 which yields a power meter reading of ≈ -9.6 dBm. Scan the full band from 8.95 to 11.05 GHz and check the power meter reading.

x. Set the POWER ADJ INCR control fully CCW.

y. If the power meter reading is greater than -16 dBm (i.e., between -9.6 and -16 dBm) connect the second resistance substitution box to the terminal posts for A21R88. If the power meter reading is less than -16 dBm, connect the resistance box in place of A21R91.

z. Select a resistance value which yields a power meter reading of ≈-16.4 across the band.

aa. Set the POWER ADJ INCR control fully CW and re-select the resistance for A21R82 to yield -9.6 dBm across the band.

ab. Set the POWER ADJ INCR control fully CCW and re-select the resistance for A21R88 (or A21R91) to yield -16.4 dBm.

ac. Repeat step aa. If it is not possible to achieve -9.6 dBm, any power level may be selected which yields an output ≥-10 dBm over the band. In such cases, resistance values for A21R81 and A21R82 may have to be selected.

ad. Repeat step ab.

ae. Set the SWP/OSC circuit breaker to OFF.

af. Solder resistors of selected values in place for A21R81, A21R82, A21R88, or A21R91.

ag. Allow the resistors to cool thoroughly after soldering, then set the SWP/OSC circuit breaker to ON.

ah. Check the power meter reading and verify that it is -16.4 ± 0.2 dBm.

ai. Set the POWER ADJ INCR control fully CW and verify that the power meter reading is no lower than -10 dBm and no higher than -9.5 dBm.

aj. Disconnect the leveling cable from J5; the power meter reading will increase and the LEVEL MALF indicator will light.

ak. Re-connect the leveling cable to J5; verify that the power meter reading drops back to the value noted in step ai and the LEVEL MALF indicator goes out. If the results are not satisfactory, the indication is that the TWT amplifier has been pushed into saturation; continue with step al. If the results were satisfactory, proceed to step an.

al. If a resistance value cannot be selected for A21R81/R82 which will prevent the TWT amplifier from operating in a saturated condition, the output of oscillator module A17 will have to be reduced to match the TWTA gain curve:

1) Disconnect output cable P61 from A17.

2) Insert a selected SMA attenuator between J61 and P61. Beginning with a 3 dB attenuator, select the value which allows satisfactory power control over the 6 dB range of the POWER ADJ INCR control and the 2 GHz range of the frequency adjustments. It will be necessary to re-select A21R81/R82 and A21R88/R91.

The attenuation value required will be 3, 6, or 10 dB; Systron-Donner Type 444-XX, Omni-Spectra Type 20600-XX, Weinschel Type 3M-XX, Hewlett-Packard Type 8493A-XX, or any other SMA attenuator rated for use to 12.4 GHz may be used.

am. Repeat steps h through k.

an. Vary the POWER ADJ INCR control through its range and verify that the detected output does not contain any evidence of oscillations.

ao. If leveling loop oscillations occur at any power level or frequency within the range, select a new value for resistor A21R106 and/or capacitor A21C14.

ap. Repeat step m.

aq. If the rise and fall times are excessive, select new capacitor values for A21C10 and/or A21C14.

ar. Repeat steps a through m.

as. Set the BAND MODE switch to RF OFF, the SWP/OSC circuit breaker switch to OFF, and the SWEEP SELECT switch to .1 SECONDS.

at. Remove the 9043 extension cable from J51 and P51.

NOTE

Perform step au if the A21 board was removed from its mountings during the oscillator setup procedures.

au. Using an ohmmeter set to the R x 1 range, measure the resistance between terminal post E2 and the mounting post directly in front of terminal E3. The resistance must be at least 10 kΩ; if the ohmmeter indicates a short circuit between E2 and ground (the mounting post), the wrong nut and flat washer have been used on this mounting post. Use the small washer on this post.

av. Attach the top cover to A17 using the 18 screws, lock washers, and flat washers removed in step q.

aw. Re-install A17 in the signal source.

ax. Calibrate the built-in-test circuits as detailed in Paragraphs 5.3.3 and 5.3.4.

SPACE RESERVED

5.6.4 Low Band Oscillator Setup. Low band oscillators are set up at the factory so the leveled power output is adjustable by the front-panel POWER ADJ INCR control from a minimum of slightly below +24 dBm to a maximum of slightly above +30 dBm. Any change of components within the A18 oscillator module or of components or modules in the leveling loop may require that setup procedures be performed at the repair depot to duplicate the original control range setup.

The hand tools listed in Paragraph 5.6.2 will also be needed for this procedure. In addition, an oscillator extension cable Model 9044, a comprehensive selection of 1/4 watt, ±2%, 200 PPM metal film resistors ranging from ≈ 180 Ω to 910 kΩ (1/4W, ±5%, carbon composition resistors may be used for values above 150 kΩ), and two resistance-substitution boxes switchable over the same ranges may be required if the initial checks in the procedure show the need for performance of the setup procedures.

In extreme cases a selection of dipped-mica ±5% capacitors ranging from ≈ 5 to 1000 pF may be required to adjust response time of the leveling amplifiers.

a. Set up the unit and test equipment as shown in Figure 5.5 and described in Paragraph 5.4.8.2 steps a and b. Set the BAND MODE switch to set the unit to cover 798 to 1202 MHz.

b. Adjust the POWER ADJ INCR control fully CW.

c. Adjust the MANUAL SCAN control to find the lowest power point; this should be -9.95 to -9.4 dBm.

d. Find the highest power point; the difference between the lowest and highest power points must not exceed 0.40 dB.

NOTE

If the requirements of steps c and d are not satisfied, proceed directly to step n.

e. Adjust the POWER ADJ INCR control fully CCW.

f. Adjust the MANUAL SCAN control to find the lowest power point; this should be -16.05 to -16.6 dBm.

g. Find the highest power point and determine that the differential between lowest and highest does not exceed 0.40 dB.

NOTE

If the requirements of steps e and f are not satisfied, proceed directly to step n.

h. Adjust the POWER ADJ INCR control for -10 dBm at ≈ 1000 MHz.

i. Set the BAND MODE switch to RF OFF.

j. Set up the test equipment as shown in Figure 5.7, but do not use the 50 Ω BNC termination.

k. Set the SWEEP SELECT switch to .1 SECONDS and the MANUAL SCAN/ VERNIER control to X1.

l. Observe the detected output of the signal source on the oscilloscope screen as the source sweeps from 798 to 1202 MHz. Check for oscillations, low points, or other evidence of unleveled operation.

m. Install the 50 Ω BNC termination and measure the square wave rise and fall times in accordance with Paragraph 5.4.9.2.

NOTE

If the results through step m have been satisfactory, proceed to step ax.

n. Set the SWP/OSC circuit breaker switch to OFF.

o. Remove oscillator module A18 from the signal source; it is held to the side panel with four screws.

p. Connect P81 through the Model 9044 extension cable to J81 on module A18.

q. Take out 18 screws holding the top cover in place and remove the top cover.

r. Locate and remove resistors A12R88 and/or A12R91; these resistors are mounted on standoff posts in most oscillator modules.

s. Locate and remove resistors A12R81 and/or A12R82 from their standoff posts.

t. Connect one resistance substitution box to the A12R81 standoff posts.

CAUTION

DO NOT ALLOW EITHER OF THE SUBSTITUTION BOX LEADS TO CONTACT GROUND, OTHER TRACES, OR EACH OTHER. DAMAGE TO OSCILLATOR MODULE A18 COULD RESULT.

u. Connect the test equipment as shown in Figure 5.5.

v. Set the SWP/OSC circuit breaker switch to ON, the BAND MODE switch to L, and the SWEEP SELECT switch to MANUAL SCAN. Verify operating indicators.

w. Set the POWER ADJ INCR control to its fully CW position; select a resistance value for A12R82 which yields a power meter reading of ≈ -9.6 dBm. Scan the full band from 798 to 1202 MHz and check the power meter reading.

x. Set the POWER ADJ INCR control fully CCW.

y. If the power meter reading is greater than -16 dBm (i.e., between -9.6 and -16 dBm) connect the second resistance substitution box to the terminal posts for A12R88. If the power meter reading is less than -16 dBm, connect the resistance box in place of A12R91.

z. Select a resistance value which yields a power meter reading of ≈ -16.4 across the band.

aa. Set the POWER ADJ INCR control fully CW and re-select the resistance for A12R82 to yield -9.6 dBm across the band.

ab. Set the POWER ADJ INCR control fully CCW and re-select the resistance for A12R88 (or A12R91) to yield -16.4 dBm.

ac. Repeat step aa. If it is not possible to achieve -9.6 dBm, any power level may be selected which yields an output ≥ -10 dBm over the band. In such cases, resistance values for A12R81 and A12R82 may have to be selected.

ad. Repeat step ab.

ae. Set the SWP/OSC circuit breaker to OFF.

af. Solder resistors of selected values in place for A12R81, A12R82, A12R88, or A12R91.

ag. Allow the resistors to cool thoroughly after soldering, then set the SWP/OSC circuit breaker to ON.

ah. Check the power meter reading and verify that it is -16.4 ±0.2 dBm.

ai. Set the POWER ADJ INCR control fully CW and verify that the power meter reading is no lower than -10 dBm and no higher than -9.5 dBm.

aj. Disconnect the leveling cable from J7; the power meter reading will increase and the LEVEL MALF indicator will light.

ak. Re-connect the leveling cable to J7; verify that the power meter reading drops back to the value noted in step ai and the LEVEL MALF indicator goes out.

al. Repeat steps h through k.

am. Vary the POWER ADJ INCR control through its range and verify that the detected output does not contain any evidence of oscillations.

an. If leveling loop oscillations occur at any power level or frequency within the range, select a new value for resistor A12R100 and/or capacitor A21C14.

ao. Repeat step m.

ap. If the rise and fall times are excessive, select new capacitor values for A12C10 and/or A12C14.

aq. Repeat steps a through m.

ar. Set the BAND MODE switch to RF OFF, the SWP/OSC circuit breaker switch to OFF, and the SWEEP SELECT switch to .1 SECONDS.

as. Remove the 9044 extension cable from J81 and P81.

NOTE

Perform step at if the A12 board was removed from its mountings during the oscillator setup procedures.

at. Using an ohmmeter set to the R x 1 range, measure the resistance between terminal post E2 and the mounting post directly in front of terminal E3. The resistance must be at least 10 kΩ; if the ohmmeter indicates a short circuit between E2 and ground (the mounting post), the wrong nut and flat washer have been used on this mounting post. Use the small washer on this post.

au. Attach the top cover to A18 using the 18 screws, lock washers, and flat washers removed in step q.

av. Re-install A18 in the signal source.

aw. Calibrate the built-in-test circuits as detailed in Paragraphs 5.3.3 and 5.3.4.

SPACE RESERVED

5.6.4 Directional Detectors. External directional detectors (levelers) shipped with Model 506 units 0001 - 0004 were intended to be kept with a single unit and not interchanged. Field experience has shown that in general no degradation of the flatness specification occurs when Model 1056-1 or 1051-1 levelers are interchanged between units. In order to test early levelers for use with units above S/N 0005, perform the procedures of Paragraphs 5.6.4.1 and/or 5.6.4.2 below.

In addition to equipment listed in Table 5.4, a BNC "tee" fitting and BNC female to 3/4-inch banana plug dual male adapter (Pomona Electronics Models 3285 and 1269) are required.

5.6.4.1 HIGH BAND LEVELER 1056-1. Excessive leveler output will prevent the signal source from generating the full +30 dBm of which it is capable; flatness will degrade if the output is too low:

a. Connect the test equipment as shown in Figure 5.4.

b. Set the controls of the signal source so the power meter reading is exactly -10 dBm at an operating frequency of 10 GHz.

c. Disconnect the leveler output cable from the 1056-1 and install the BNC "tee" fitting. Attach the leveler output cable and another BNC cable to the "tee", and fit the "tee" to the 1056-1.

d. Attach the free end of the BNC cable installed in step c to the input of the digital voltmeter (item g in Table 5.4). Use the BNC to banana plug adapter if necessary. Both input terminals of the voltmeter must be ungrounded.

e. Set the voltmeter to the 0.1 VDC range.

f. At an RF power level of 1.0 W (+30 dBm) through the main line of the directional coupler, or -10.0 dBm as read on the power meter using the test setup of Figure 5.4, the output voltage of the 1056-1 must be -50 ± 5 mV DC.

g. If the leveler output is greater than -55 mV DC, connect a resistance substitution box in parallel with the voltmeter input terminals (i.e., across the leveler output lines). If the output is less than 45 mV, the unit must be factory-modified.

h. Select a resistance value which yields a reading of 50 ± 5 mV DC with +30 dBm out.

i. Find the lowest power output point in the band and set the POWER ADJ INCR control for a power meter reading of -10 dBm; manually scan the entire band and verify that leveling flatness is within 0.4 dB.

j. The selected resistance should be installed in a BNC load attachment and permanently installed to the 1056-1 output connector with heat-shrinkable tubing or some other permanent method. If the tubing is used, use caution not to apply excessive heat to the crystal detector. A BNC load is available from Systron-Donner as Model 9117-XX (specify resistance when ordering).

5.6.4.2 LOW BAND LEVELER 1051-1. Perform the following steps to ensure the low band leveler output is within specifications; excessive output will reduce the RF amplitude and low output will adversely affect flatness:

a. Connect the test equipment as shown in Figure 5.5.

b. Set the controls of the signal source so the power meter reading is exactly -10 dBm at an operating frequency of 1000 MHz.

c. Disconnect the leveler output cable from the 1051-1 and install the BNC "tee" fitting. Attach the leveler output cable and another BNC cable to the "tee", and fit the "tee" to the 1051-1.

d. Attach the free end of the BNC cable to the digital voltmeter, using the banana plug adapter if necessary. Be sure both input terminals of the voltmeter are ungrounded.

e. Set the voltmeter to the 0.1 VDC range.

f. At an RF power level of 1.0 W through the main line of the 1051-1, the output voltage must be -100 ± 10 mV DC.

g. If the leveler output exceeds -110 mV DC, find a resistance value which will act as an appropriate shunt load for the leveler. Ensure that flatness stays within the 0.4 dB specification with this resistance value.

h. If the leveler output was less than -90 mV DC, the unit must be returned to the factory for modification.

SPACE RESERVED

SECT.	PAGE	PARA.	LINE	SERIAL NO.	INSTRUCTIONS
6	6-1	6.1		0005-up	Add schematic diagram listing: Figure 6.12A A13 Interface Schematic Diagram Page 6-14
6	6-1	6.2			Modify listings:
				0001-up	Figure 6.20 A1 Relay Assembly Page 6-22
				0001-up	Figure 6.21 A9 Extender Board Assembly Page 6-23
				0005-up	Figure 6.22 A13 Interface Assembly Page 6-24
					Figure 6.23 A10 YIG Driver Assembly Page 6-25
					Figure 6.24 A21 AM Assembly Page 6-26
					Figure 6.25 A11 Linearizer Assembly Page 6-27
					Figure 6.26 A12 AM Assembly Page 6-28
6	6-1	6.2		0005-up	Add material list references:
					A8 Regulator P.C. Board Material List Page 6-29
					A20 Power Supply Material List Page 6-33
					A2 Trigger Sweep Board Material List Page 6-37
					A3 Operational Amplifier Board Material List Page 6-42
					A4 BIT #1 Board Material List Page 6-45
					A5 BIT #2 Board Material List Page 6-48
					A6 Trigger Holdoff Board Material List Page 6-51
					A7 Reset Board Material List Page 6-54
					A1 Relay Board Material List Page 6-59
					A15 Frequency Set Assembly Material List Page 6-60
					A9 Extender Board Material List Page 6-62
					A13 Interface Board Material List Page 6-63
					A10 YIG Driver Board Material List (H. Band) Page 6-66
					A21 AM Board Material List (H. Band) Page 6-70
					A17 High Band Oscillator Material List Page 6-74
					A11 Linearizer Board Material List (L. Band) Page 6-77
					A12 AM Board Material List (L. Band) Page 6-80
					A18 Low Band Oscillator Material List Page 6-84
					SPACE RESERVED
6	6-3/4	Fig. 6.2		0005-up	Delete chassis schematic diagram D900322B; substitute D900322C supplied in drawing package
6	6-5	Fig. 6.3		06024-up	Delete power supply schematic diagram C900327B; substitute C900327G supplied in drawing package
6	6-6	Fig. 6.4		0005-up	Delete trigger sweep schematic diagram C900328B; substitute C900328C supplied in drawing package

SECT.	PAGE	FIG.	UNITS	SERIAL NO.	INSTRUCTIONS
6	6-8	Fig. 6.6		0005-up	Delete built-in-test #1 schematic diagram C900330B; substitute C900330D supplied in drawing package
6	6-9	Fig. 6.9		0001-up	Change figure number; was listed as Figure 6.9 A5 Built-in-test #2 Schematic Diagram. Change to read Figure 6.7 A5 Built-in-test #2 Schematic Diagram
6	6-10	Fig. 6.8		0001-up	Delete trigger holdoff schematic diagram C900332B; substitute C900332C supplied in drawing package
6	6-11	Fig. 6.9		0001-up	Delete reset schematic diagram C900333B; substitute C900333C supplied in drawing package
6	6-13	Fig. 6.11		0005-up	Delete high band oscillator schematic diagram C900339B; substitute C900533B supplied in drawing package
6	6-14	Fig. 6.12		0005-up	Delete low band oscillator schematic diagram C900340B; substitute C900340E supplied in drawing package
6	6-14A	Fig. 6.12A		0005-up	Add page between existing pages 6-14 and 6-15; add Figure 6.12A A13 Interface Schematic Diagram C900695C supplied in drawing package
6	6-15	Fig. 6.13		0005-up	Delete regulator assembly drawing C950457C; substitute C950457E supplied in drawing package
6	6-16	Fig. 6.14		0005-up	Delete trigger sweep assembly drawing C950455B; substitute C950455D supplied in drawing package
6	6-17	Fig. 6.15		0005-up	Delete operational amplifier assembly drawing C950456C (issue of 3-28-72); substitute C950456C (issue of 5-21-74) supplied in drawing package
6	6-18	Fig. 6.16		0005-up	Delete BIT #1 assembly drawing C950473C; substitute C950473D supplied in drawing package
6	6-20	Fig. 6.18		0005-up	Delete trigger holdoff assembly drawing C950471B; substitute C950471C supplied in drawing package
6	6-21	Fig. 6.19		0005-up	Delete reset assembly drawing C950470C; substitute C950470D supplied in drawing package
6	6-22	Fig. 6.20		0005-up	Delete relay board assembly drawing C950469B (issue of 3-24-72) ; substitute C950469B (issue of 7-9-74) supplied in drawing package
6	6-23/24	Fig. 6.21		0005-up	Delete extender assembly drawing C950479B; substitute C950479C supplied in drawing package. Change page number from 6-23/24 to 6-23

SECT.	PAGE	PARA.	LINE	SERIAL NO.	INSTRUCTIONS
					SPACE RESERVED
6	6-24	Fig. 6.22		0005-up	Add interface assembly drawing C950695A supplied in drawing package; mark page 6-24 and Figure 6.22
6	6-25	Fig. 6.23		0005-up	Add YIG driver assembly drawing C950696A supplied in drawing package; mark page 6-25 and Figure 6.23
6	6-26	Fig. 6.24		0005-up	Add AM board assembly drawing C950467D supplied in drawing package; mark page 6-26 and Figure 6.24
6	6-27	Fig. 6.25		0005-up	Add linearizer assembly drawing C950468C supplied in drawing package; mark page 6-27 and Figure 6.25
6	6-28	Fig. 6.26		0005-up	Add AM board assembly drawing C950474E supplied in drawing package; mark page 6-28 and Figure 6.26
					SPACE RESERVED
6	6-29			0005-up	Add regulator material list ML950457E supplied in drawing package; adds pages 6-29 through 6-32
6	6-33			06024-up	Add power supply material list ML950512C supplied in drawing package; adds pages 6-33 through 6-36
6	6-35			0005-up	Add trigger sweep material list ML950455D supplied in drawing package; adds pages 6-37 through 6-41
6	6-40			0005-up	Add operational amplifier material list ML950456C supplied in drawing package; adds pages 6-42 through 6-44
6	6-43			0005-up	Add BIT #1 material list ML950473D supplied in drawing package; adds pages 6-45 through 6-47
6	6-46			0005-up	Add BIT #2 material list ML950472B supplied in drawing package; adds pages 6-48 through 6-50
6	6-48			0005-up	Add trigger holdoff material list ML950471C supplied in drawing package; adds pages 6-51 through 6-53

SYSTRON DONNER

INSTRUCTION MANUAL CHANGES
MODEL 506 DATE 1 Jan 1975
TYPE Source PAGE 40 OF 40

SECT.	PAGE	PARA.	LINE	SERIAL NO.	INSTRUCTIONS
6	6-51			0005-up	Add reset material list ML950470D supplied in drawing package; adds pages 6-54 through 6-58
6	6-56			0005-up	Add relay board material list ML950469B supplied in drawing package; adds page 6-59
6	6-57			0005-up	Add frequency set material list ML950509A supplied in drawing package; adds pages 6-60 and 6-61
6	6-59			0005-up	Add extender material list ML950479C supplied in drawing package; adds page 6-62
6	6-60			0005-up	Add interface material list ML950695A supplied in drawing package; adds pages 6-63 through 6-65
6	6-63			0005-up	Add YIG driver material list ML950696A supplied in drawing package; adds pages 6-66 through 6-69
6	6-67			0005-up	Add AM board material list ML950467D supplied in drawing package; adds pages 6-70 through 6-73
6	6-71			0005-up	Add oscillator module material list ML950510B supplied in drawing package; adds pages 6-74 through 6-76
6	6-74			0005-up	Add linearizer material list ML950468C supplied in drawing package; adds pages 6-77 through 6-79
6	6-77			0005-up	Add AM board material list ML950474E supplied in drawing package; adds pages 6-80 through 6-83
6	6-81			0005-up	Add oscillator module material list ML950511B supplied in drawing package; adds pages 6-84 and 6-85

MP MASTER
MA34039